Nikon

Nikon F3 Repair Manual

NKF3RM

Section 1 Specifications & Mechanism

Content

外観図 Figure of External

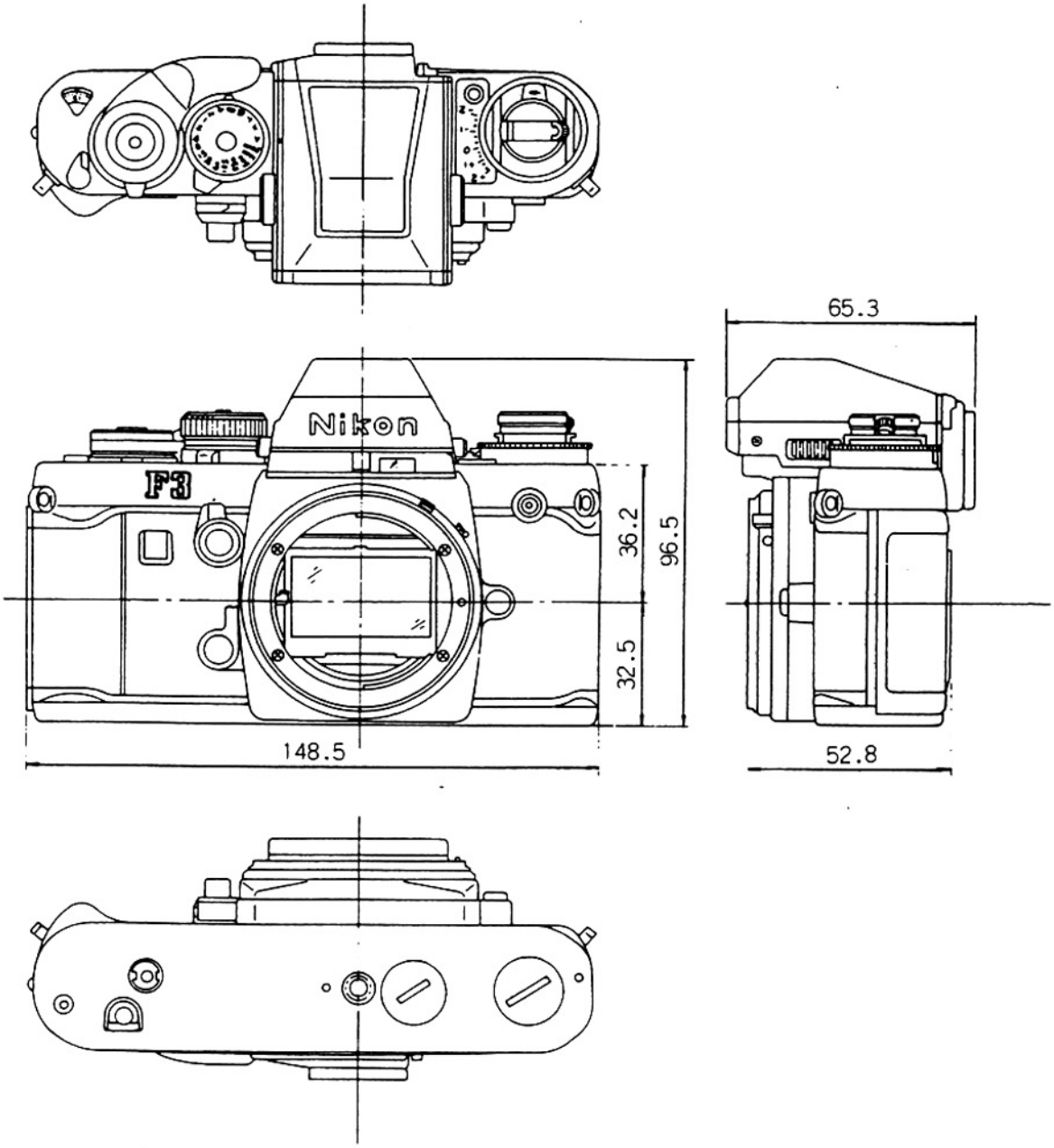

1-1 Specification

Type:	35mm single lens reflex camera
Picture format:	24mm x 36mm
Viewing system:	Frame coverage; 100% Interchangeable viewfinders
Lenses usable:	AI-type Nikkor lenses and Non AI-type Nikkor lenses (Stop-down exposure metering)
Lens mount:	Nikon bayonet type
Shutter:	Electromagnetic shutter-release; electronically controlled, horizontal-travel titanium focal-plane shutter; automatic shutter speed selection within a range of 8 sec. to 1/2000 sec.; manual shutter speed selection for the 8 - 1/2000 sec. range plus "B" (electronical), "T" (mechanical) and X synchro (1/80 sec.); when power source is exhausted, exposures can be made at 1/60 sec. Via mechanical-release knob (11.5ms)
Self-timer:	Electronically controlled; Red LED flickers to indicate its operation (10 sec.)
Exposure measurement:	TTL center-weighted exposure metering at full aperture; body-built-in meter incorporates one silicon photo-diode (SPD); metering range EV1 to EV18
ASA film speed range:	ASA12 - 6400
Exposure compensation:	+2EV to -2EV (At ASA12, up to EV+1, at ASA6400, down to EV-1)
Memory lock:	Provided
Viewfinder information:	<u>Liquid crystal display</u>; 1) Shutter speed ... four-digit read-out 2) Under/overexposure (manual) ... "+" and "-" display 3) Beyond auto exposure control ... "+2000", or "-8-" display 4) Manual shutter speed setting ... "M" display

Red LED display

At flash shooting, ready-light lights up when flash unit is charged and flickers when the setting is beyond camera's synch range or mounting foot is insufficiently installed or ASA dial is set at a film speed higher than 400.

Aperture-direct-readout provision

enables indication of lens aperture set when lens in use offers AI facility.

Built-in illuminator

illuminates LCD and ADR.

Focusing screen:	Interchangeable, exclusively-designed (F2's screen not usable)
Film advance lever:	Single stroke or a series of strokes; stand-off angle 30°, winding angle 140°
Frame counter:	Shows number of frames exposed; automatically resets to "S" when camera back is opened; automatic operation starts from frame 1.
Multi-exposure:	Possible via multi-exposure lever
Film rewinding	Manual crank-type
Flash synchronization:	Synchronization range; for electronic flash unit, 1/80 sec. to 8 sec. plu "B" synch speed when optional electronic flash unit is mounted; Auto..... 1/80 sec. Manual... 1/80 sec. (X or faster) Set shutter speed (slower than X)
Accessory Shoe:	fitted with hot-shoe contact, ready-light contact and TTL auto flash signal contact.
Reflex mirror:	Automatic instant-return mirror with lock-up feature
Depth-of-field preview button:	Provided
Camera back:	Hinged, swing-open type; removable; memo-holder provided

Motor-drive coupling:	Screw-on type connection Signal 1) Closing curtain signal 2) Electromagnetic shutter-release start signal 3) Film-advance completion signal 4) Power source signal 5) 16 sec.-hold signal 6) Release-metering signal
Cable release socket:	Tapered screw
Meter ON/OFF switch:	Meter switched on when shutter release button is depressed slightly; stays switched on for 16 sec. after finger is lifted off button: Display also stays indicated for 16 sec. after switching off.
Power source:	Two 1.5V silver-oxide batteries (G13); powered by MD's power source when mounted MD.
Battery power check:	can be made by LCD (power is enough while display remains indicated).
Dimensions:	148.5 (W) x 96.5 (H) x 65.5 (D) mm
Weight:	700g

1-2 Outlines of Mechanism

1-2-1 Film-advance Mechanism

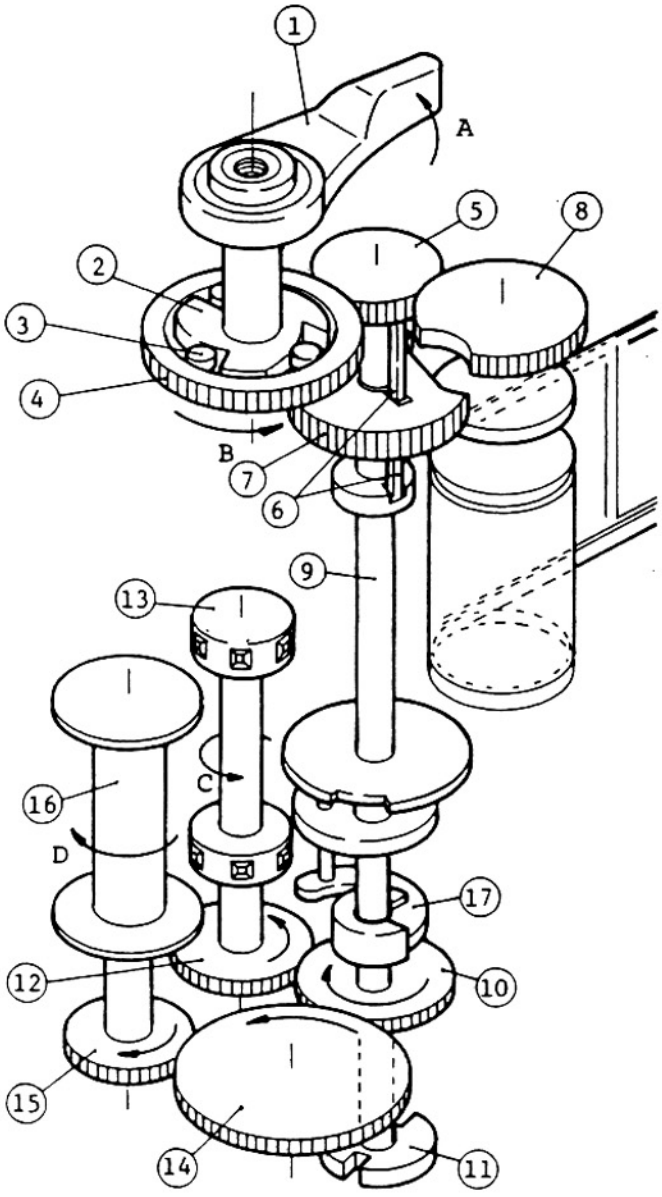

The film-advance mechanism of the F3 is characterized by the one-way clutch and the connecting shaft: the former serves for noise reduction, as well as series of shorter film-advancings, the latter simplifies the drive gears train or decreases the torque which the motor-drive needs to fulfil film-advancing.

MD take-up torque:
F3 ... 1.0kgcm
F2 ... 3 - 5.5 kgcm

Stroking Film-advance lever ① in the direction A rotates Take-up Gear ④ in the direction B by way of Clutch ② and Roller ③ (One-way clutch). This power rotates Gears ⑤ and ⑦, and reaches Gear ⑩ through the connecting shaft.

Gear ⑦ (Incomplete gear) rotates Gear ⑧ to cock the shutter. But Gear ⑩ drives Sprocket Gear ⑫, Spool Idle Gear ⑭ and Spool Gear ⑮ to rotate Sprocket ⑬ and Spool ⑯ in the respective directions C and D.

Note: Shutter cocking and Take-up Claw ⑰ are referred to Multi-exposure mechanism, page (M9) and Shutter cocking mechanism, page (M15) respectively.

1-2-2 Counter Switch Mechanism

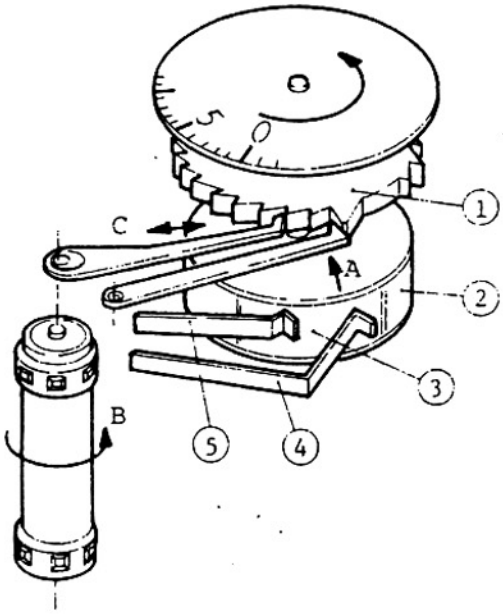

After loading the film into the camera, it is necessary to make a few blank exposures for taking the first picture.

However, as to automatically controlled camera, if the shutter-speed dial is set to "Auto", shutter speed becomes slow under low-light conditions, which prevents rapid picture-taking action.

For quick and easy film loading, auto-exposure control remains cancelled until the frame counter reaches "1" as is already introduced by the EM.

The mechanism is: When the frame counter is advanced by the film-advance operation, ON/OFF changeover of the counter switch is made by the combined operation of Ratchet ①, Insulator ②, Conductor ③, Contact Blade B ④ and Contact Blade A ⑤.

With the shutter-speed dial set to "Auto", when the frame counter is between "S" and "0", the shutter speed becomes automatically 1/80 sec. by the operation of IC circuit.

At shutter-speed dial settings ranged from 1/2000 - 1/125 sec., the shutter speed also becomes 1/80 sec.

Counter switch turns OFF while the frame counter indication is between "0" and "1". Auto-exposure control starts working after the frame counter reaches "1".

1-2-3 Closing Curtain Switch & Film-advance Limit Mechanism

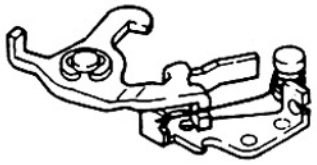

Closing Curtain SW

A Closing curtain switch for the F3 opens during film-advance operation and closes at shutter-releasing, which gives film-advance signal to the motor drive.

During film-advancing:

B When Connecting Shaft is rotated, Stopper ① rotates in the direction A and the claw of ① pushes Take-up Stopper ② in the direction B, turning closing curtain switch OFF.

End of film-advancing:

C When film-advance operation is complete, the roller of Charge Lever ③ is pushed in the direction C by Cam ④. As a result, Stopper Lever ⑤ which held by ③ moves in the direction D and engages with ②, thus retaining ②. Film-advancing is limited by the engagement between the claw of ① and ②. In accordance with the movement of ②, Stopper Lever ⑥ moves in the direction E until the tip of ⑥ comes in contact with Stopper ⑦, thereby stopping the rotation of the sprocket.

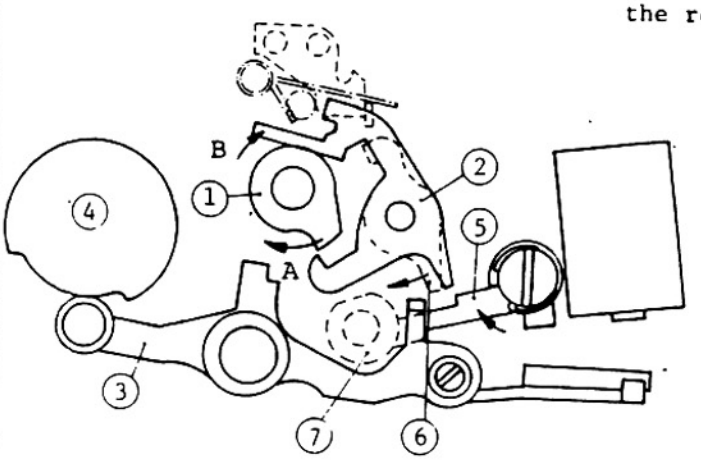

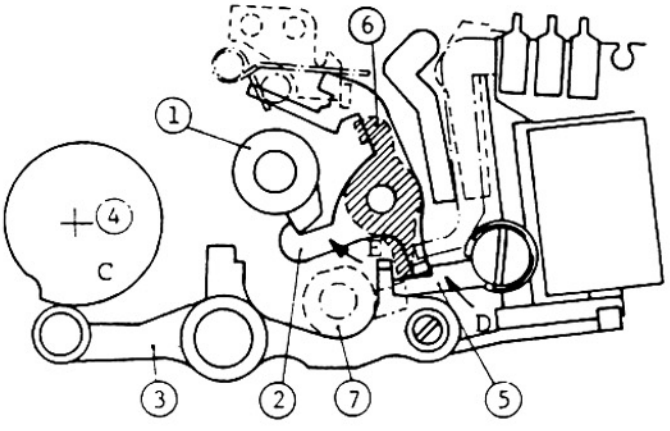

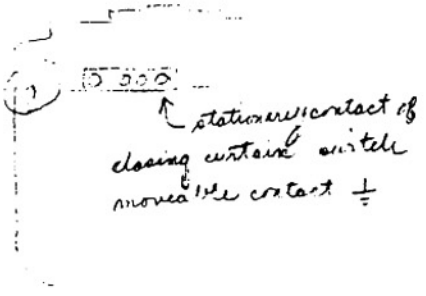

Shutter-releasing :

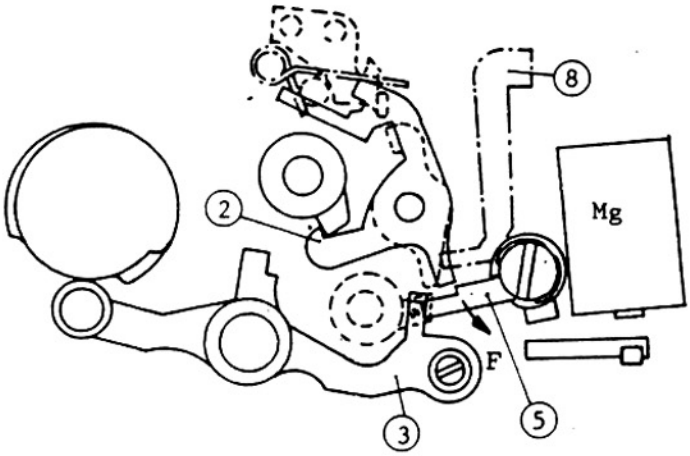

D When the shutter-release button is depressed, Spring ⑧ is pushed and holds ②. When the closing curtain is released, ③ falls apart from the magnet and the protrusion of ③ (mark※) strikes ⑤ in the direction F.

Completion of Release :

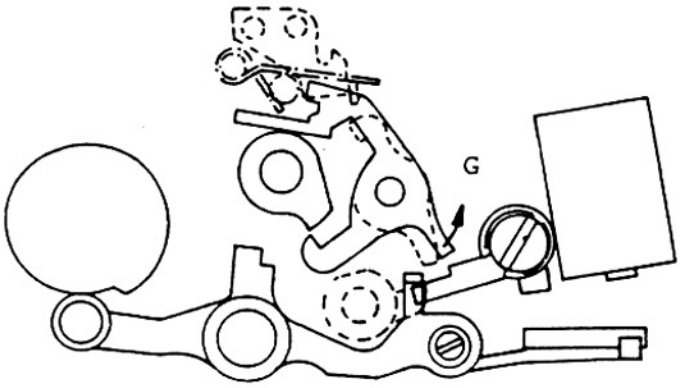

E When the finger is lifted off the release button, ② is rotated in the direction G by Spring force and ② is disengaged from ①. Then, closing curtain Switch becomes ON and film-advance signal is given to the motor drive to start.

Troubleshooting

I) With the motor drive mounted, if closing curtain switch closes earlier than the time when ① is disengaged from ②, the motor drive fails to operate by the operation of film-advance auto-stop circuit.

II) When the shutter is released with the pressure applied onto the film-advance lever, if the spring (#309) is not effectively tensioned, the blurred image may result.

1-2-4 Multi-exposure Mechanism

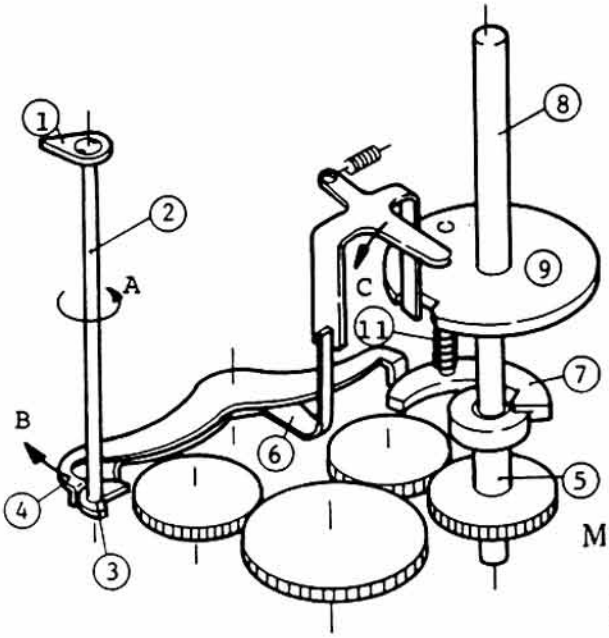

Multi-exposure mechanism of the Nikon F3 is different from that of the Nikon F2. To facilitate the multi-exposure control, Multi-exposure Lever ① is located on the top of camera body.

Multi-exposure Setting :

When Multi-exposure lever ① is set to multi-exposure control setting, both Axle ② and Cam ③ are rotated in the direction A and thus Cam rotates Set lever ④ in the direction B. At this moment, Take-up claw ③ is disengaged from the cutout of Lower gear ⑤. Simultaneously, Cam ③ is held by Lock lever ⑥.

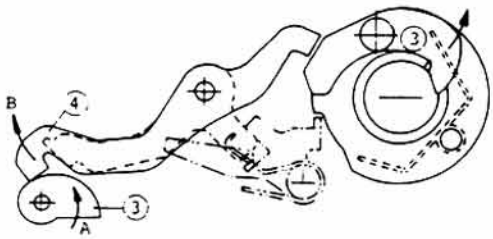

Winding Operation :

When the film-advance lever is stroked with Multi-exposure lever set to multi-exposure control setting, ⑦ is disengaged from the cutout of ⑤. Since the rotation of Connecting shaft ⑧ is not transmitted to ⑤, neither Sprocket nor Spool rotates. However, the shutter is cocked, because Incomplete gear incorporated into ⑧ engages with Shutter curtain control gear.

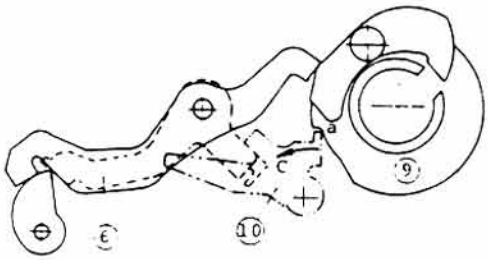

Cancellation :

During film-advance operation cycle, when Take-up disk ⑨ rotates from Point a to Point b, Signal lever ⑩ is pushed in the direction C and thus ③ is disengaged from ④. At the end of film-advance operation (i.e. immediately when ⑩ engages with Portion a of ⑨), ⑦ is engaged with the cutout of ⑤ by Spring ⑪, thereby restoring to the normal condition.

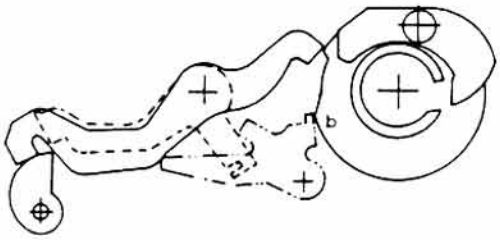

Note: During film-advance operation, ⑤ is not disengaged from ⑥, thus preventing multi-exposure operation.

1-2-5 Shutter-release Magnet & Shutter-release Mechanism

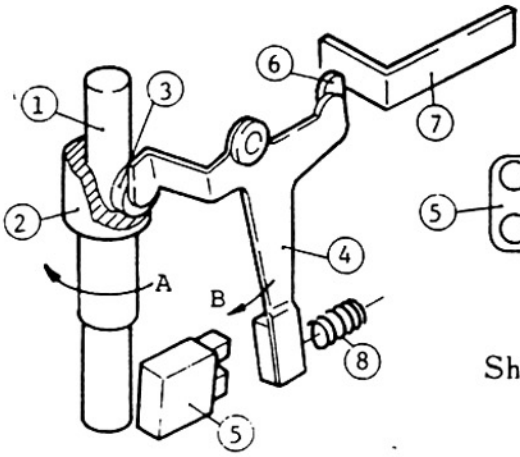

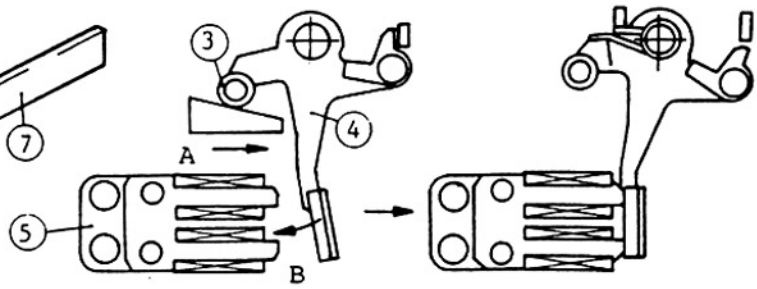

Shutter Cocking :

When film-advance operation is made, Cam ② unified to Connecting Shaft ① rotates in the direction A. As a result, Roller ③ on the cam surface (shaded area) is pushed up and Lever ④ moves in the direction B, then sticks to shutter-release Magnet ⑤ , resulting in shutter-cocked condition.

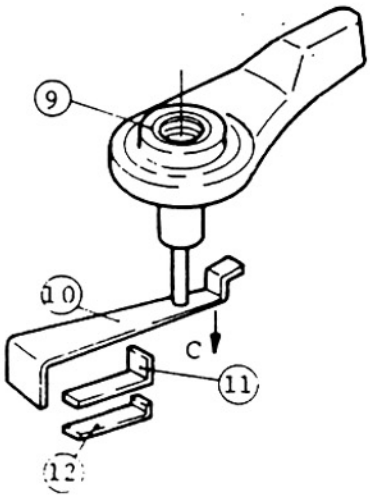

Troubleshooting

Shutter cannot be completely cocked if the shutter-release magnet unit is incorrectly installed.

Shutter-releasing :

When Shutter-release Button ⑨ is slightly depressed, Lever ⑩ is pushed downward (Arrow C) and comes in contact with Blade ⑪ , closing release-metering switch. Thus power source circuit becomes ON and display system starts operating.

When the button ⑨ is depressed further down, both ⑩ and ⑪ touch Blade ⑫ , closing the release switch.

Simultaneously, release-signal is given to the magnet and the magnet loses the magnetic force.

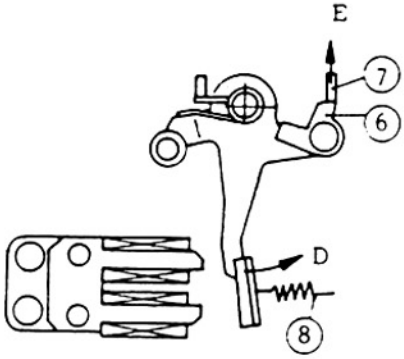

Therefore, ⑥ being tensioned by Spring ⑧ is drawn in the direction D and Claw ⑥ pushes Lever ⑦ upward (Arrow E) to release the reflex-mirror, thus releasing the shutter.

1-2-6 Mirror Mechanism

Front unit assembly consists of two units: front plate unit and mirror box unit, which have been divided so far in the earlier models.

The main components are:

1) Mirror-box (Mirror-actuator and Mirror holder)
2) AI meter coupling
3) Electromagnetic-release
4) Lens manual stop-down and Mirror lock-up
5) Mechanical shutter-release
6) Switches (Shutter SW, Safety SW and Memory SW)
7) Viewfinder
8) Electrical control system

The main features are:

1) Specially treated reflex-mirror and Metering system

Almost all light coming through the lens is led into the view-finder via the reflex-mirror as usual. However, a small percentage of light will pass through the pinholes half-mirror located in the middle of the reflex-mirror (See fig.) to lead the light to the light sensor via the metering mirror for exposure metering.

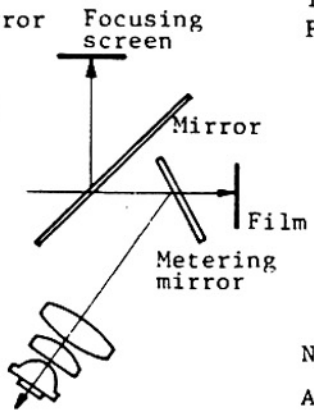

Shaded area:

Pinholes half-mirror
Transmission = 8%
Pinhole shape = oval

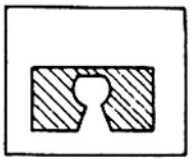

Number of pinholes = Approx. 17,000/c m²

2) Air damper system

Air damper is incorporated in the mirror-actuating unit to decrease mirror shock and to muffle the sound.

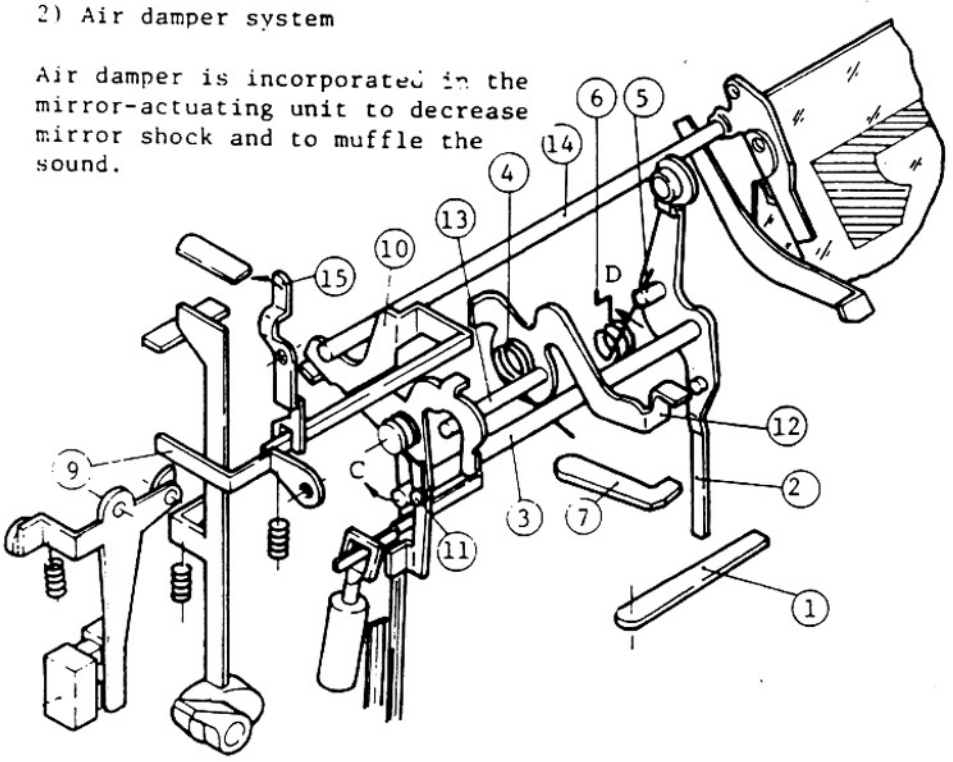

Mirror-cocking Mechanism

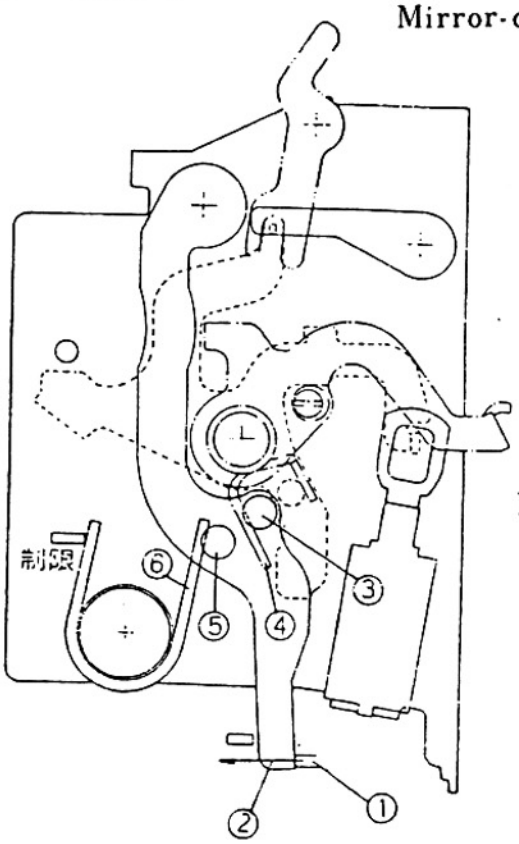

Mirror-cocking :

While the film-advance lever is stroked, Mirror Cocking Lever ① pushes Vertical Lever ② via Mirror-charge Cam in the direction A. Pin ⓐ on ② also charges Spring ③ as soon as Pin ⑤ charges Mirror-down Spring ⑥ . When the film-advance lever is further stroked, ② is engaged with Quick Return Lever ⑦ , thus completing mirror-cocking. Under the condition, ① returns to its original position.

Mirror-releasing :

When the shutter-release button is fully depressed, Lever ⑨ is pushed upward (Arrow B) and disengages Main Lever ⑩ . At the moment, Mirror-up Spring ④ engaged with Pin ⑪ on Lever ⑩ is released and rotates Lever ⑩ in the direction C. When ⑩ rotates, Lever ⑫ is pushed in the direction D via Pin ⑬ and the mirror is raised up (Arrow E) via Pin ⑭ . While the mirror is rising to the taking position (Interval between the mirror and the mirror-stopper to be 8.3 ± 1mm), the shutter is released via Lever ⑮ engaged with Lever ⑩ .
After completion of closing curtain's travel, ⑦ is disengaged from ② and ② is returned to its original position by Mirror-down Spring ⑥ . Other associated levers are also returned to its original position.

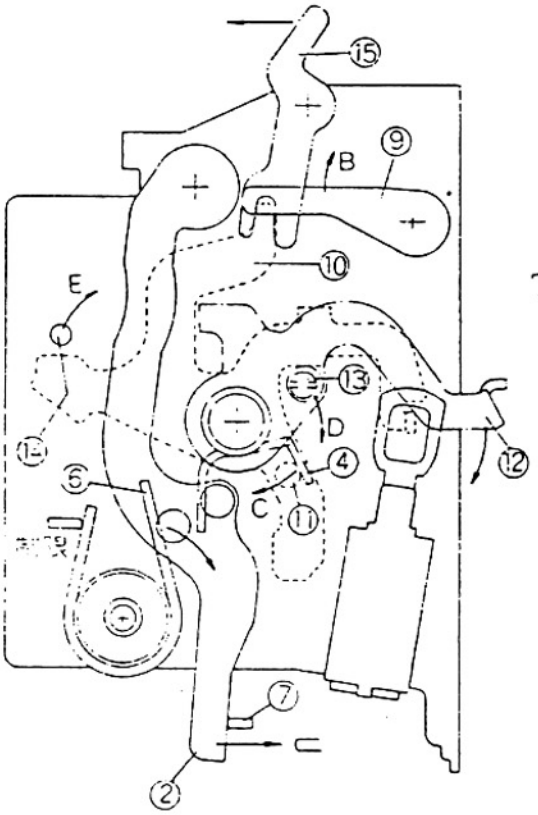

Troubleshooting

Main causes of failure to advance the film when the film-advance lever is stroked with a lens mounted may be traced to the following:

a) Incorrect height of Diaphragm Actuating Lever ⑫
b) Improper engagement between Lever ⑨ and Main Lever ⑩
c) Improper movement of Main Lever ⑩ due to unbalanced power of every spring.

1-2-7 Shutter Switch & Mechanism

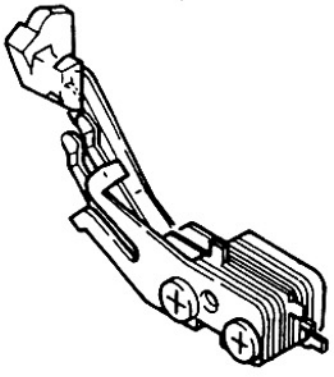

Shutter SW

These switches closes when Main Lever ⑩ starts moving and opens at mirror-down.

Note: With the F3, Mirror Switch for memory which has been incorporated into the electronically controlled camera (EL, FE, etc.) is not provided. Instead, memory is done by the combination of the analogue actuating signal and the OFF/ON timing of shutter switch, thereby enhancing the reliability.

Troubleshooting

Should chattering of shutter switch occur, unstable auto-shutter speed may result.

Metering Mirror :

Metering mirror moves in strict accordance with the movement of the reflex-mirror and sticks to the mirror-holder at up-position.
Thus, image cut-off by metering mirror will not occur.

1-2-8 Shutter Mechanism

1-2-8-1 Outlines

The F3 uses a conventional double-roller focal plane shutter, whose curtains are made of titanium. Shutter-speed control is electronical at the automatic/manual setting from Bulb to 1/2000 sec. But it is purely mechanical at the manual setting of 1/2000 sec. and Time (extra-long exposure) operation. Additionally, the second shutter release button is provided for the mechanical release at a speed of 1/55 sec. when the battery's power is exhausted.

All parts of the shutter mechanism are installed into a complete unit. The unit can be removed alone from the camera body and directly brought under repairs and adjustments.

The performance of the mechanism is assured by the following characters:

1) Cocking the shutter by the incomplete gear separates the shutter mechanism from the film-advance mechanism at the completion of shutter cocking cycle. Thus, the shutter curtains travel does not shock the film-advance mechanism.

2) The time of the shutter curtains travel across the aperture is decelerated to approx. 12ms (the F2 is specified as approx. 10ms). It has the advantage of stabilizing the travel at higher shutter-speed release, improving the durability of curtains and reducing the torque of film-advance.

3) The shutter control mechanism provides a stable start-timing of shutter curtains travel at the setting of 1/2000 sec.

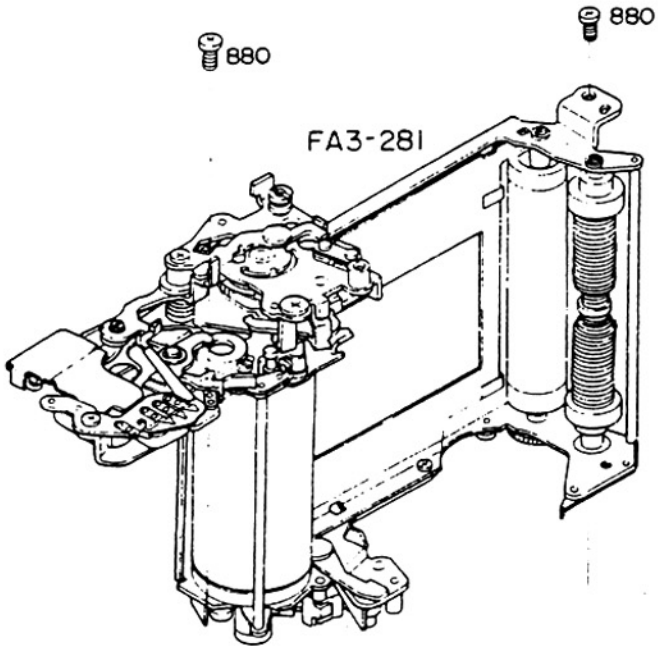

1-2-8-2 Shutter Cocking Mechanism

Stroking the film-advance lever rotates Gear ①, Gear ② and Gear ③ (incomplete Gear). Gear ② disengages Claw ⑤ (bound-proof claw) from the cam on Gear ⑥. Thus, Gear ⑥ allows Cam ⑦ to rotate in the direction A. Cam ⑦ drives Cam ⑧ and Pulley ⑪ through the engagement of Post 7-1 with Protrusion 8-1. Turning Pulley ⑪ engages with Post ⑫ to start the winding rollers of opening and closing curtains.

Simultaneously, the motion of Cam ⑦ pushes Arm ⑨ in the direction B, and spring-loaded Hook ⑭ follows Arm ⑨ until its end attaches onto Magnet ⑮. Note also that the motion of the cam on Gear ⑥ closes the trigger switch.

At the final stage, Gear ③ is disengaged from Gear ⑥ by the incomplete teeth of each gear so as to cut off the film-advance mech. from the shutter release shock. Lever ⑯ engages with Cam ⑦ for the shutter control. Claw ⑰ latches Cam ⑧ for tensioning the opening curtain. Post ⑫ holds Hook ⑭ for tensioning the closing curtain. Thus, the shutter cocking procedure is completed.

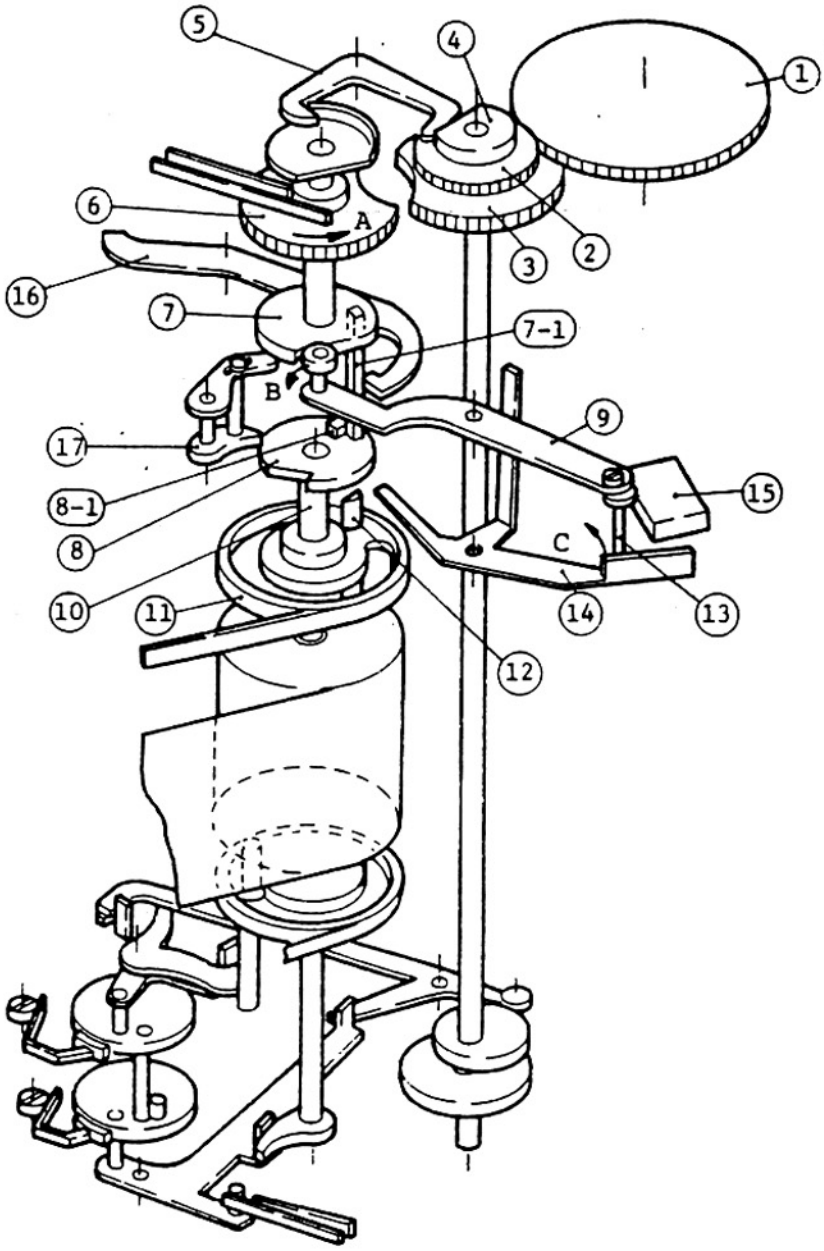
5
4
1
6
A
2
3
16
7
7-1
B
9
17
15
8-1
8
C
10
11
14
13
12

1-2-8-3 Shutter-release Mechanism

At the Automatic/Manual Setting from Bulb to 1/2000

Depressing the shutter-release button raises the mirror to the taking position through use of the electronical signal. After the mirror rising, the signal lever (see page) disengages Lever ⑯ from Cam ⑦. Thus, Cam ⑦ and Gear ⑥ rotates in the direction D.

Gear ⑥ opens the trigger switch, and the shutter control circuit will be in operation. It changes Magnet ⑮ to hold Hook ⑭ with its magnetic force.

Post ⑦-③ of Cam ⑦ strikes Lever ⑱, and Lever ⑰ unlatches Cam ⑧. So the opening curtain starts to travel across the aperture.

After the shutter speed is determined, the control circuit cuts off the current flow to Magnet ⑮. Magnet ⑮ frees Hook ⑭, and Hook ⑭ is disengaged from Post ⑫. It releases the closing curtain.

To return the mirror to the viewing position, Pin ㉑ strikes Lever ㉒.

Note that when the opening curtain is released, Lever ⑲ closes the syuch contact through Arm ⑳.

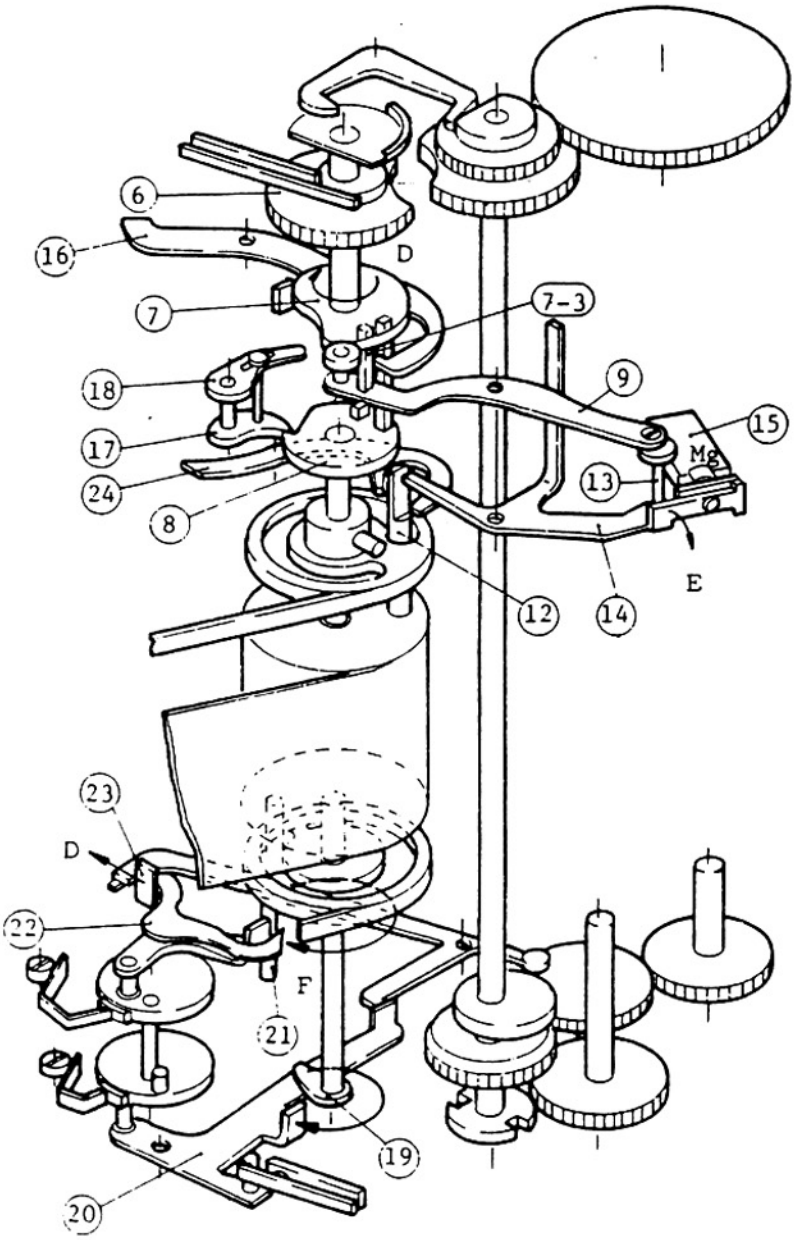
6
16
D
7
7-3
18
9
15
17
Mg
24
13
8
E
12
14
23
D
22
F
21
19
20

At the Manual Setting of 1/2000 sec.

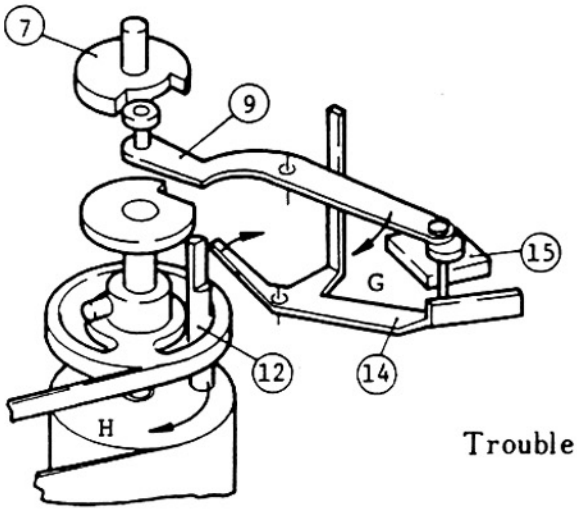

The mechanism operates in the same procedure as at the automatic/manual setting from Bulb to 1/2000 sec. until the opening curtain starts.

At the manual setting of 1/2000 sec. the shutter control circuit does not charge Magnet 15 . Thus it does not hold Hook 14 . The motion of Cam 7 returns Arm 9 to the original position. Hook 14 follows Arm 9 , and disengages Post 12 . The closing curtain travels across the aperture.

Troubleshooting

Time variations of the shutter curtain-travel fall into two categories at the manual setting of 1/2000 sec. When the variations are less than 0.05ms, they should be troubleshooted to the shutter control components: the movement of Hook 14 , the rotation of Cam 7 and loosened Eccentric pin #283. When the variations are more than 0.05ms, they should be troubleshooted to the shutter components; the shutter curtain position, the rotation of the winding/take-up rollers, the defective springs for tensioning curtains, the excessive play of Drum Shaft and deformed light-shield #255.

When the exposure information displays +2000 for shutter speed at the automatic setting, the mechanical limiter can work to release the shutter at min. speed of 0.35ms.

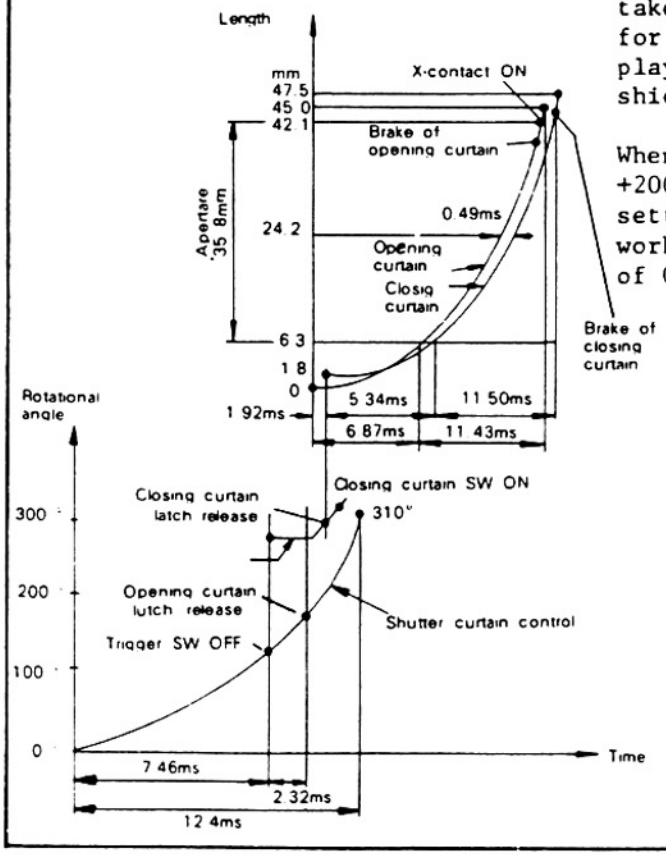

1-2-8-4 Mechanical Shutter Release by the Shutter-release Knob

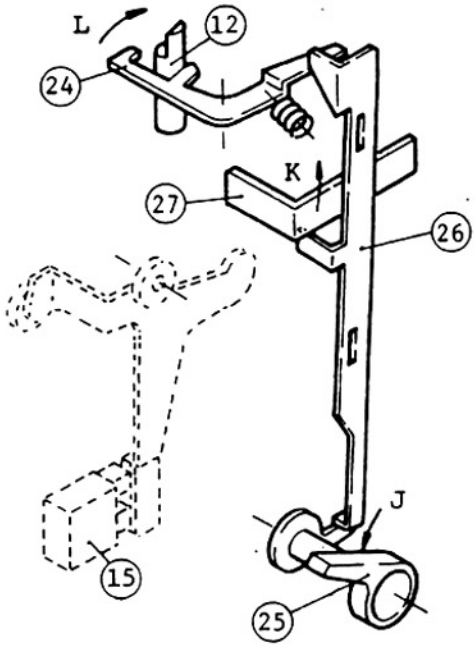

Depressing Knob 25 pushes Hook 26 upward as illustrated.
This releases the mirror by Lever 27 . Simultaneously, Hook 26 disengages Lever 24 from Post 12 . As to subsequent mechanical operation to the opening curtain's travel, the mechanism works in the same procedure as at the automatic setting.

After completing the opening curtain's travel, Screw 28 strikes Lever 24 to be disengaged from Post 12 . This starts the closing curtain. At the time, Magnet 15 does not hold Hook 14 . Thus it frees Post 12 when Arm 9 returns after the motion of Cam 7 .

Troubleshooting

When the mechanical release is used at the halfway film-advancing, it results in the mirror lock-up or the uneven frame-to-frame spacing.

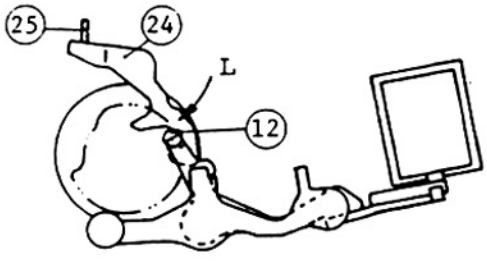

fig. I

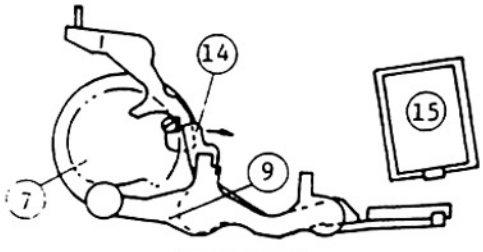

fig. II

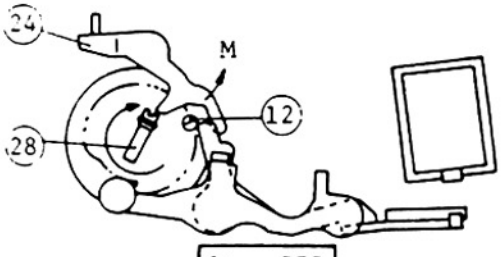

fig. III

1-2-8-5 Time Operation for Extra-long Exposure

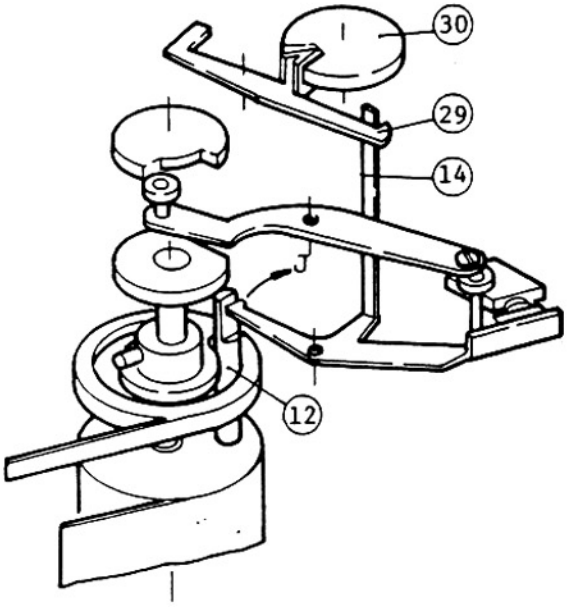

Setting the shutter-speed dial to "T" places Lever 29 against Cam 30 as in fig. I, and engages the end of Lever 29 with Hook 14. Mechanical sequence from shutter-release operation to the opening curtain travel is exactly the same as at the manual setting of 1/2000 sec. However, the closing curtain does not travel immediately after the opening curtain, since the engagement of Lever 29 and Hook 14 holds the shutter open for the time-operation.

When the shutter-speed dial is set to "B" or "X" to terminate the time-operation, Cam rotates to disengage 29 from Hook 14. Subsequently, the closing curtain starts.

Troubleshooting

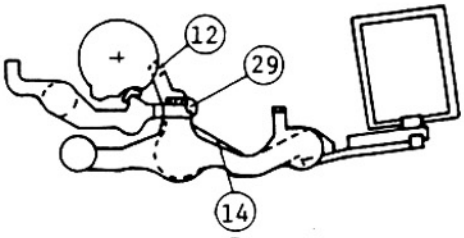

fig. I

Malfunction of the time-operation is caused by the improper movement of Lever 29 and the insufficient engagement between Lever 29 and Hook 14.

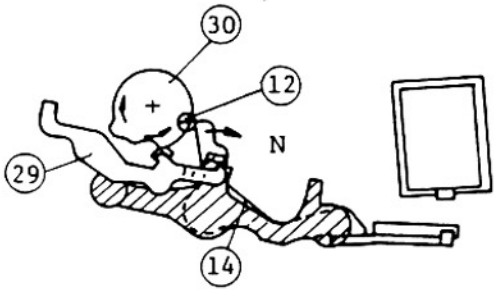

fig. II

Section 2 Disassembling

Content

2-1 Chart of Disassembling Procedure

40FB—R.3040.A

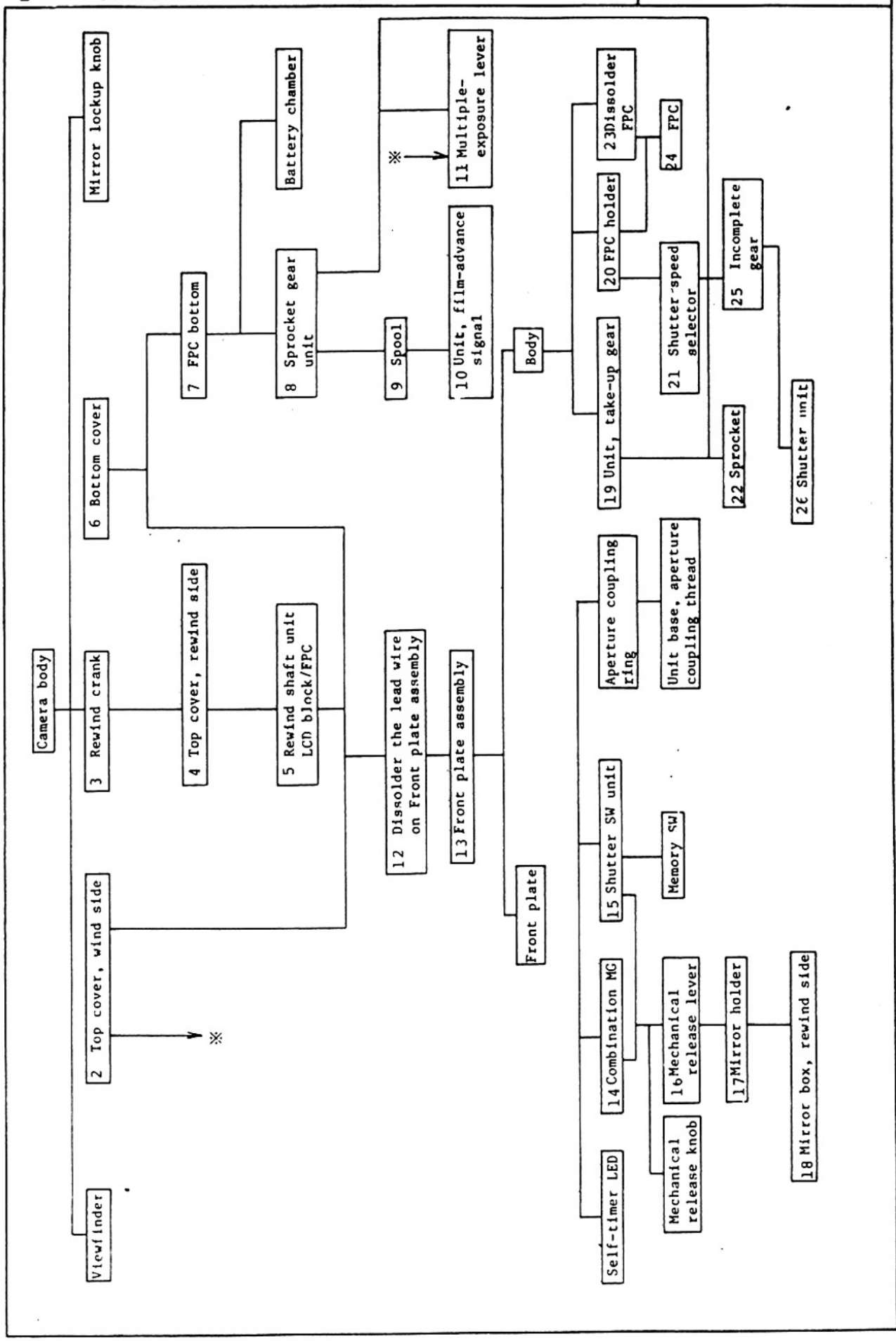

2-2 Film-advance Lever

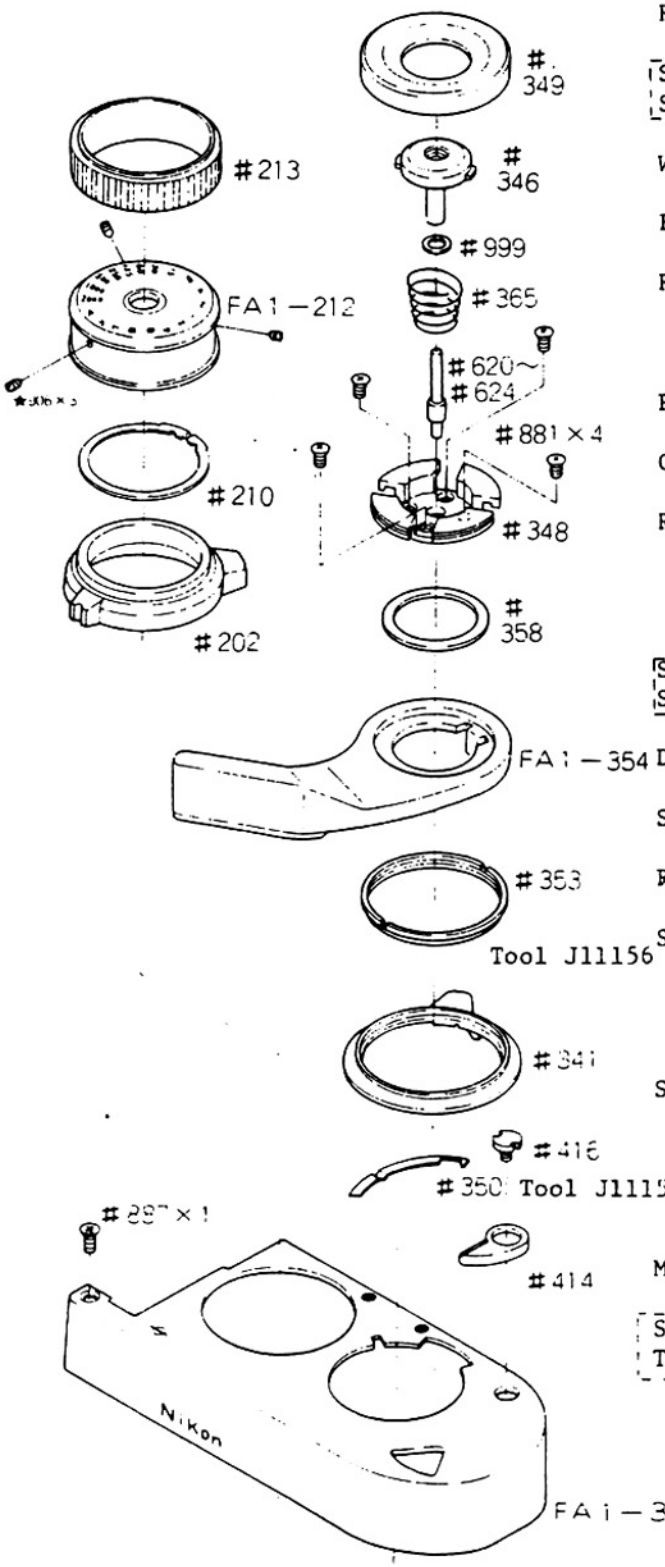

Cover ring #349

Tool: J11157

Release button shaft #346

Release shaft #620

Screw #881 x 4
Stopper #348

Washer #358

Film-advance lever FA1-354

Ring #353

Tool: J11157

Power lock lever #341

Click spring #350

Rubber ring #213

Tool: Use a lising solution to Priobond.

Screw ⊖ #906 x 3
Shutter speed selector FA1-212

Disk FA1-208

Spring #209

Retaining ring #210

Self-timer lever #202

Note: Turn #202 to ON-position for removing.

Screw #416

Tool: J11158
Note: Unscrew #416 with #414 holding.

Multi-exposure lever #414

Screw ⊕ #887
Top cover FA1-3

2-3 Rewind Crank

Rewind knob #651
Rewind crank FA1-652
Rod #655

↓

Spring #656
Washer #658

↓

Rewind shaft #659
Washer #991
Friction spring #662
Tube #663

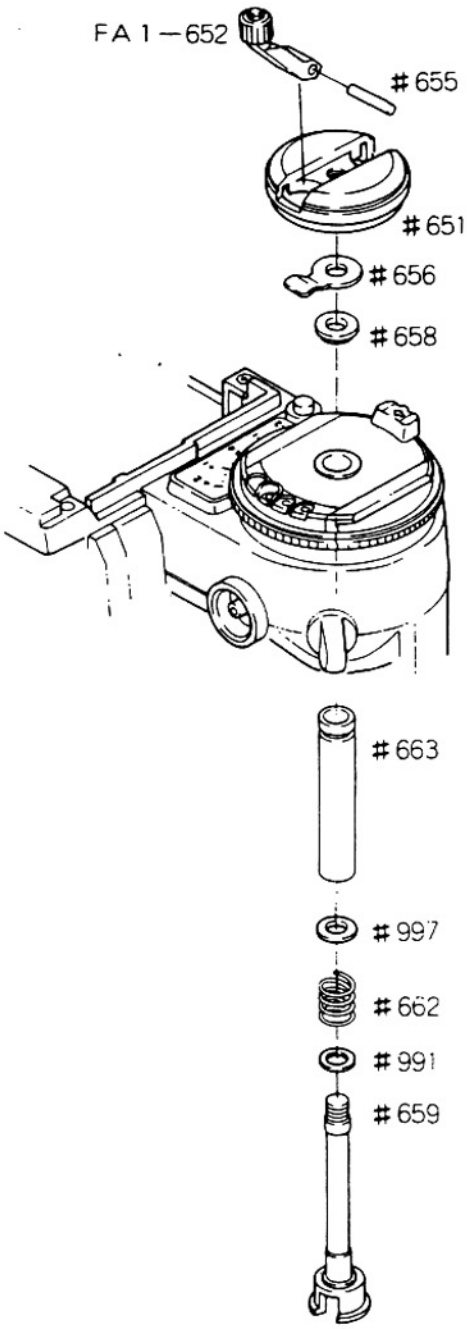

2-4 Top Cover, rewind side

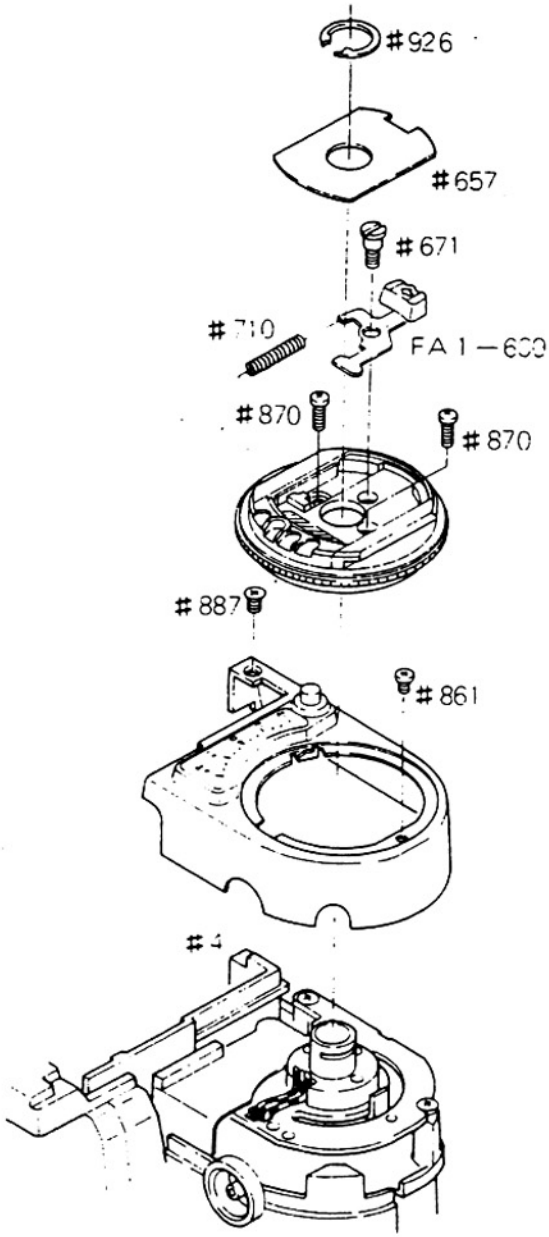

Snap ring #926

↓ Tool: J5272

Cover #657

↓

Spring #710

↓

Screw #671

↓

Tab Fa1-669

↓

Dissolder

↓ Lead wire (orange) #1075
Lead wire (white) #1074
Lead wire (blue) #1073

Screw ⊕ #870 x 2
Shoe FA1-664

↓

Screw ⊕ #861
Screw ⊕ #887
Top cover, rewind side FA1-4

2-5 Display Block

Dissolder

↓

Lead wire (orange) #1075
Lead wire (white) #1074
Lead wire (blue) #1073
Lead wire (brown) #1078

Screw ⊕ #914 x 3
Unit, rewind shaft FA2-661

↓

Dissolder

↓

Lead wire (violet) #1076
Lead wire (orange) #1080

Screw ⊖ #669 x 2

Note: Loosen the one of #669, which locates near the front plate, first thing.

Screw ⊕ #864 x 3
Display block FA1-132

Note: Use care not to damage the FPC.

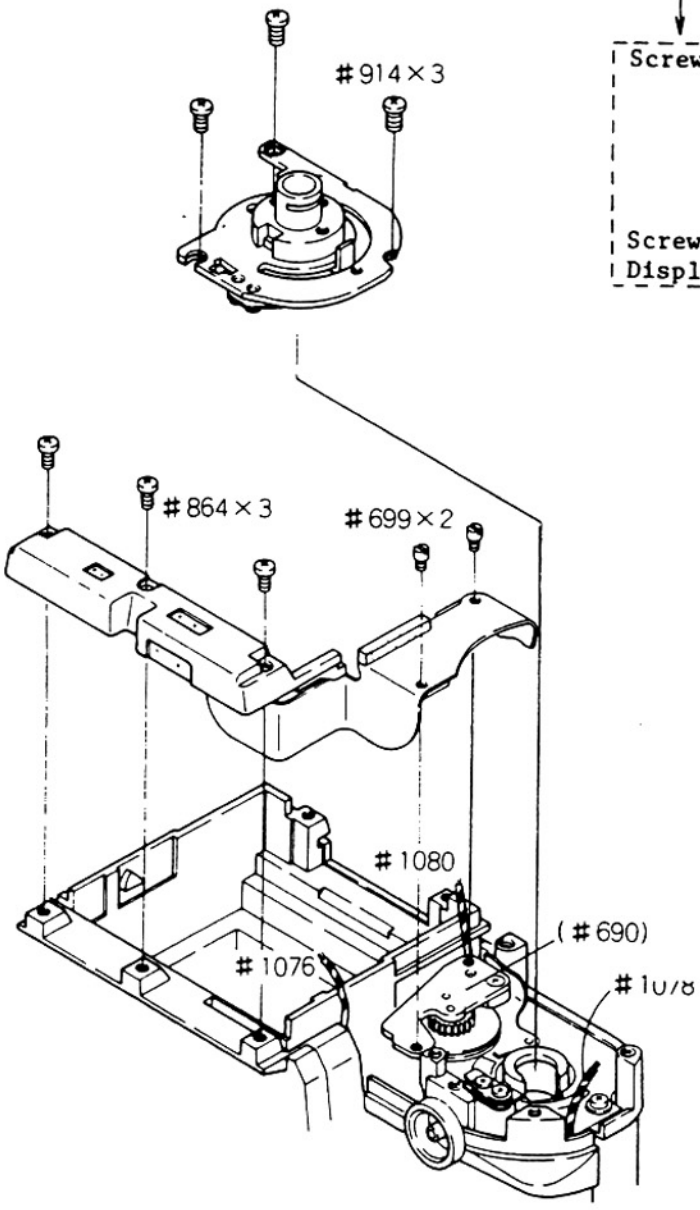

2-6 Bottom Cover

Screw #898
↓
MD coupling #549
↓
Screw ⊕ #870
Post #587
↓
Screw ⊕ #888 x 2
Bottom cover FA1-7
↓
Spring #534

Note: Reinstall #549 in place.

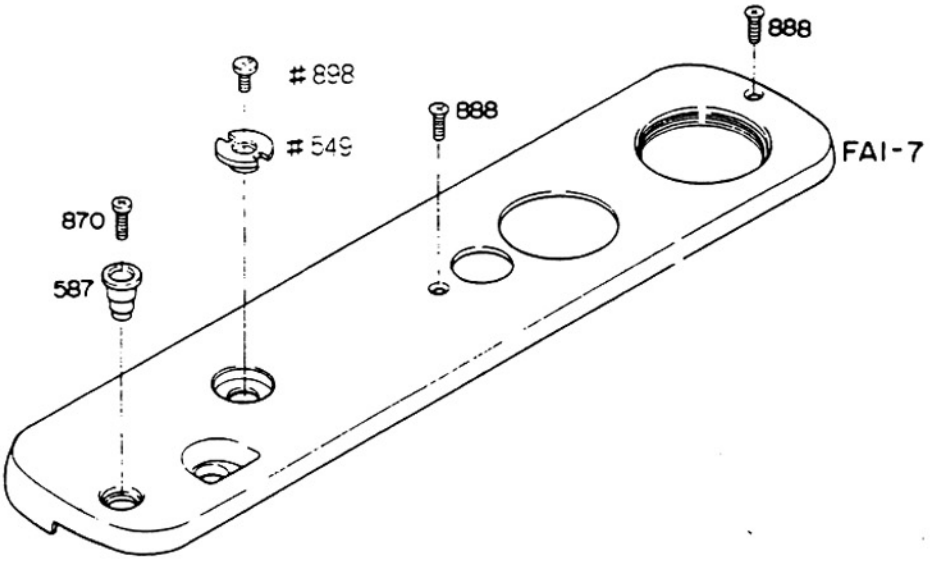

2-7 FPC (Unsoldering)

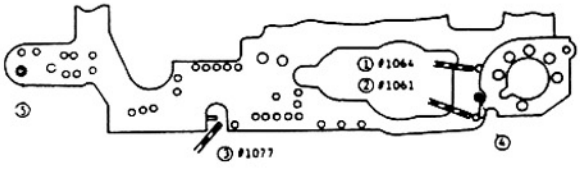

Unsolder

Lead wire (black) #1064
Lead wire (red) #1061
Lead wire (gray) #1077
Terminal Vccl
Terminal Film-advance completion SW

Note: Remove the terminals with a solder-joint sweeper.

Screw #860
Washer #969
Nut #38
Cover, #12

Screw ⊕ #857

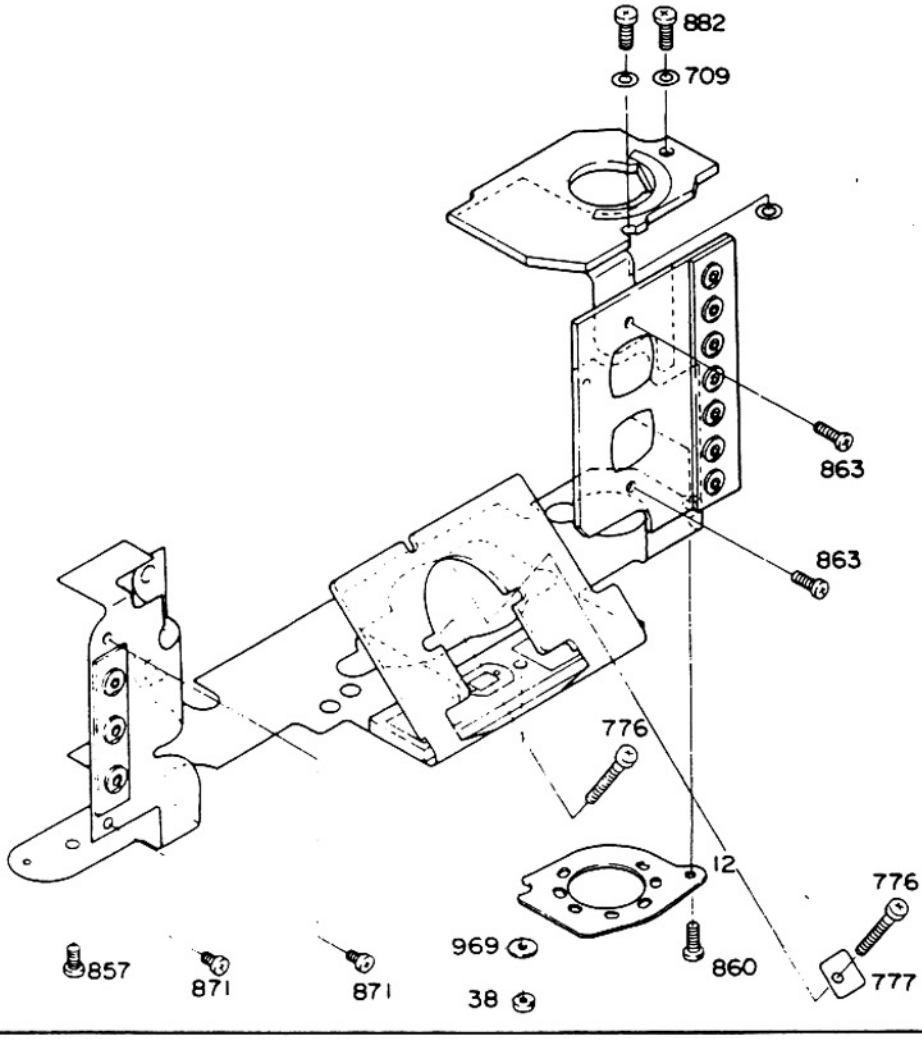

2-8 Rewind Lever

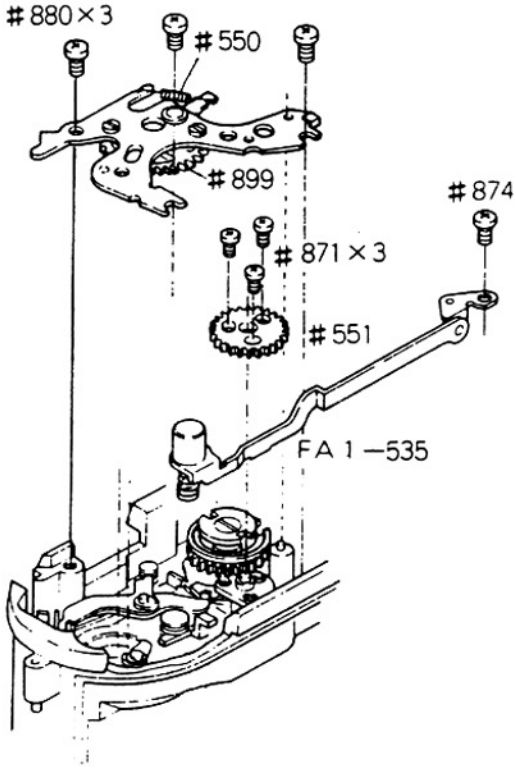

Screw ⊕ #880 x 3
Unit, sprocket gear FA1-565
↓
Screw ⊕ #871 x 3
Sprockt gear #551
↓
Screw ⊕ #874
Rewind lever FA1-535

2-9 Spool

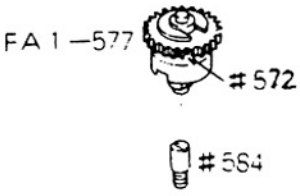

Spool friction FA1-577
↓
Upper spool shaft #584
Spool FA1-582

Tool: J11161

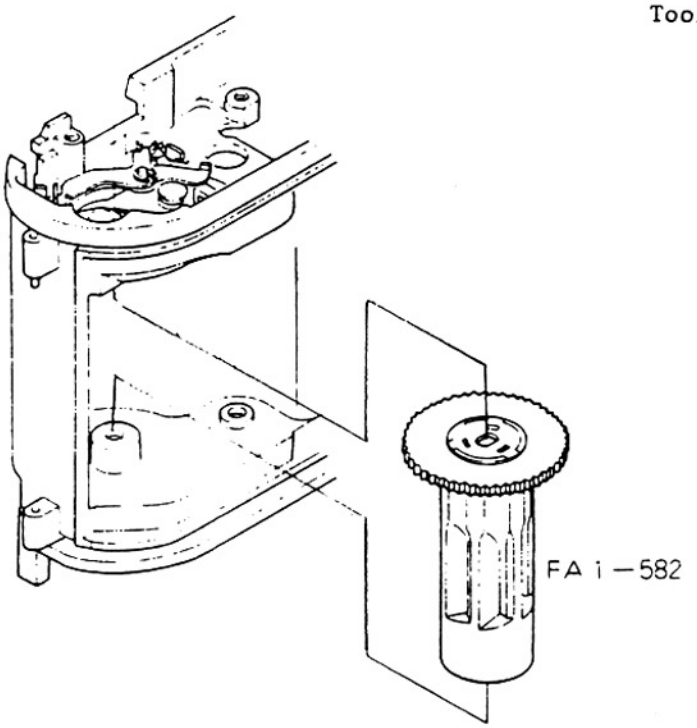

2-10 Film-advance Signal Unit/Multi-exposure Axle

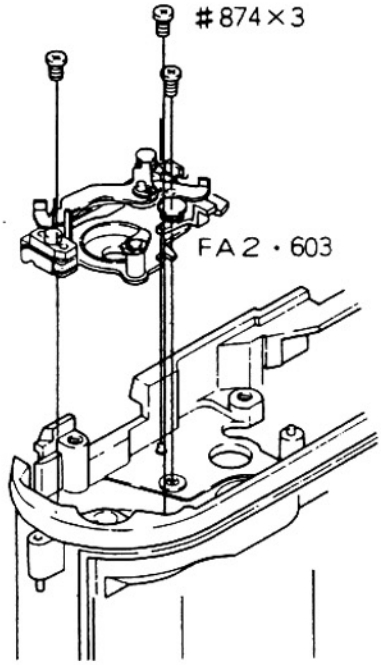

Screw ⊕ #874 x 3
Unit, film-advance signal FA2-603

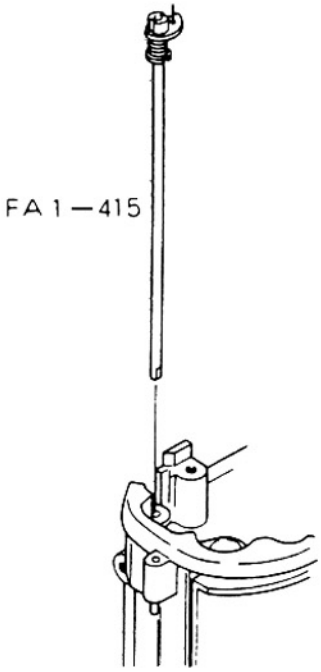

Screw ⊕ #904
Screw ⊕ #907
Coupler #413
↓
Axle, multi-exposure FA1-415

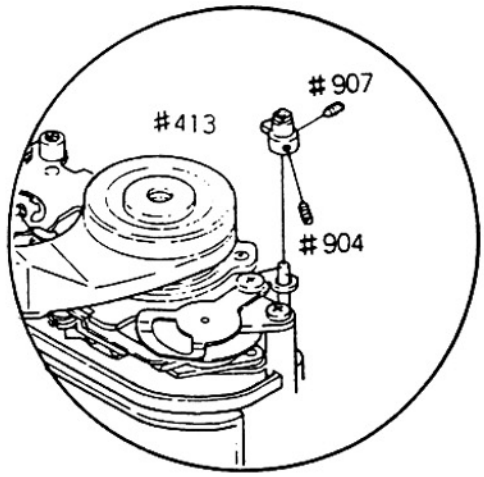

2-11 Front Plate (Unsoldering)

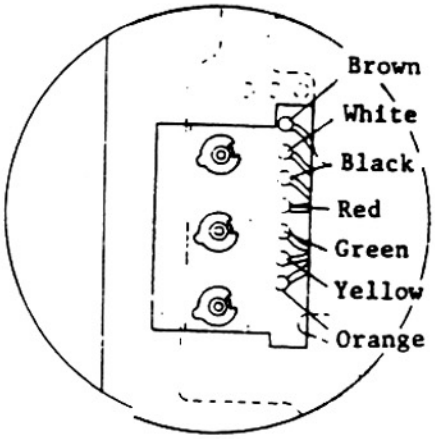

Unsolder

Lead wire (brown) #1066
Lead wire (white) #1065
Lead wire (red)
Lead wire (black) Combination MG
Lead wire (green) #1083
Lead wire (yellow) #1081
Lead wire (orange) #1082
↓
Lead wire (orange) #1080
Lead wire (gray) #1077

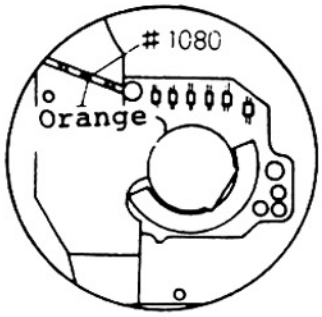

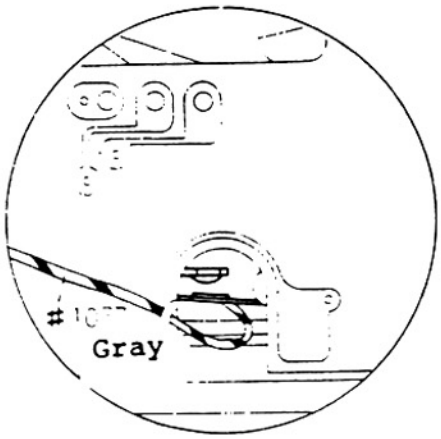

2-12 Front Plate Assembly

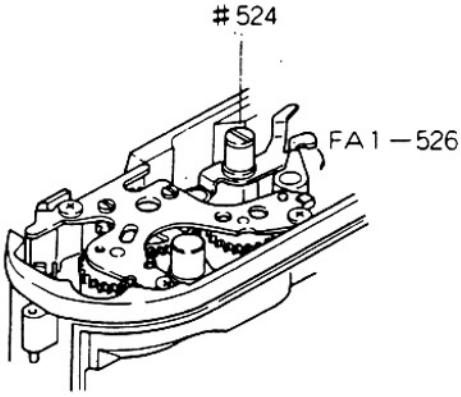

Axle #524
Mirror cocking lever FA1-526

Note: When FA1-526 is in cocked condition, it can be removed easily.

When FA1-526 not removed, turn #524 2-3 turns to loosen. It allows FA1-526 to place aside in the direction of arrow.

Screw ⊕ #909 x 2
Screw ⊕ #883 x 4
Screw ⊕ #892 x 2
Fronte plate assembly FA3-6

Note: When the shutter is in released condition, it can be removed easily.

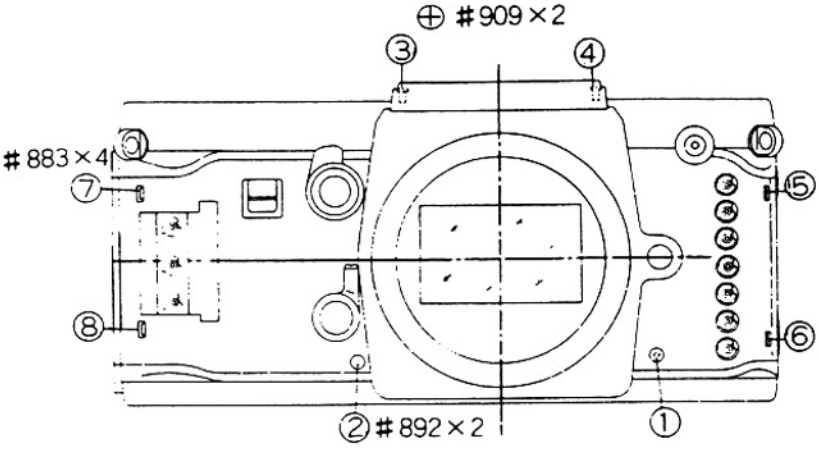

2-13 Combination Magnet

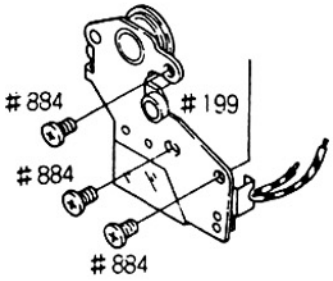

Screw ⊕ #884 x 3
Coil #199

Dissolder

2-14 Shutter Switch

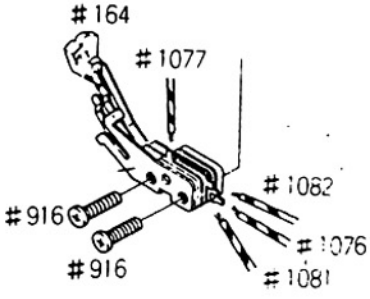

Lead wire (violet) #1076
Lead wire (gray) #1077

Screw ⊕ #916 x 2
Unit, shutter release SW FA1-751

2-15 Mechanical Release Lever

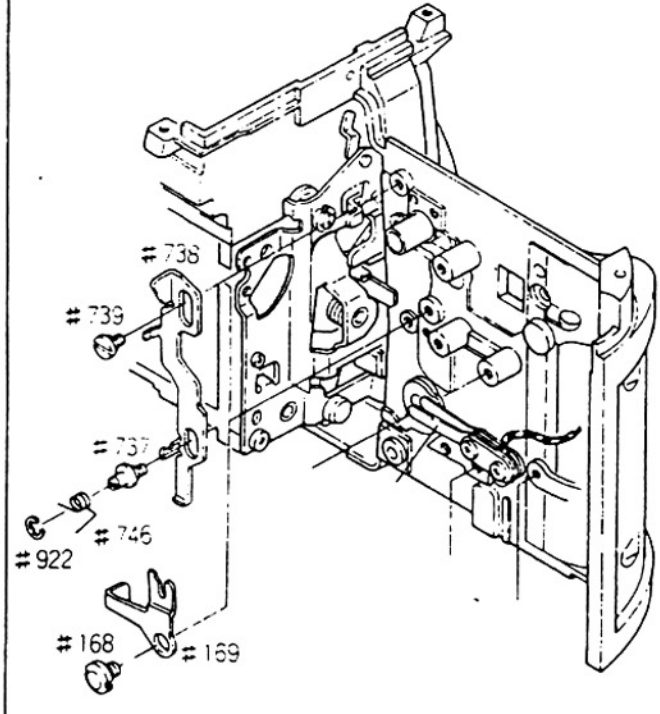

Axle #168
Coupling lever #169

Tool: J11162

Snap ring #922
Spring #746

Axel #737
Screw - #739
Lever #738

2-16 Mirror Holder

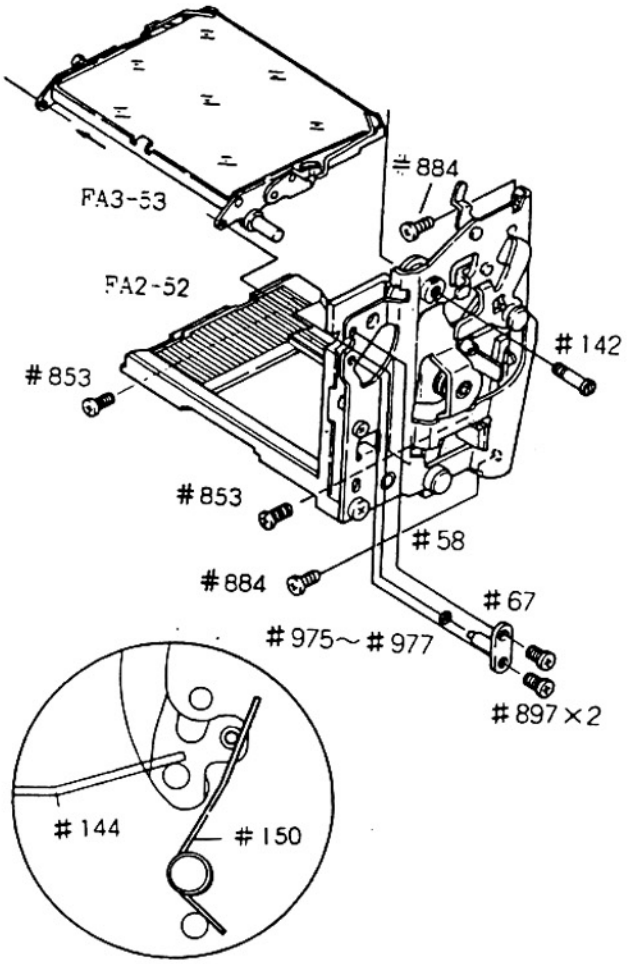

Spring B #144
Spring #150
↓
Screw ⊕ #897 x 2
Mirror bearing shaft #67
Washer #975

Note: Use care not to fall #975

↓
Screw ⊕ #853 x 2
Screw ⊕ #884 x 2
Screw ⊖ #142 x 1
Unit, mirror-box actuating FA2-52
↓
Mirror holder FA3-53

2-17 Mirror Box Unit, rewind side

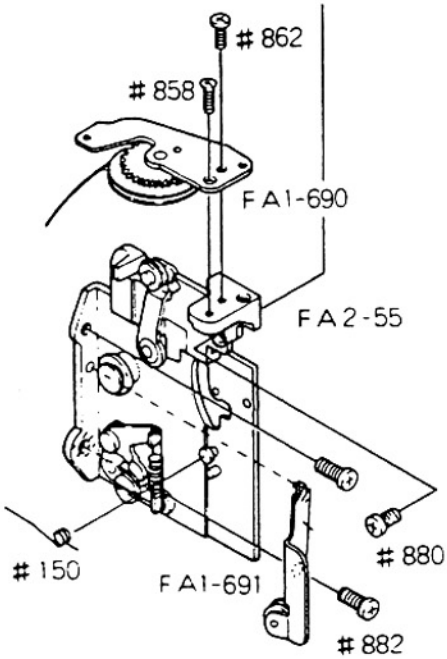

Screw ⊕ #881 x 1
Screw ⊕ #882 x 2
Unit, mirror-box(rewind side) FA2-55
Unit base FA1-690
Unit base FA1-691

2-18 Take-up Gear Unit

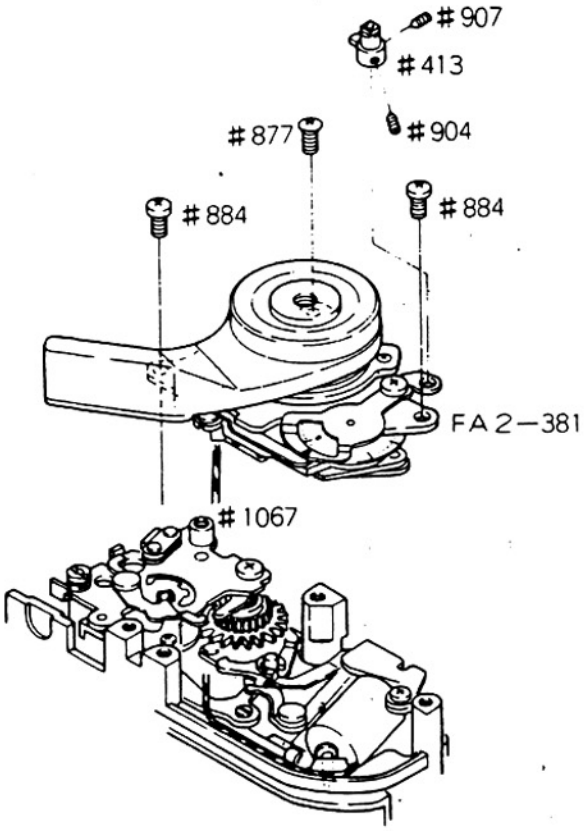

Screw ⊖ #904
Screw ⊖ #907
Coupler #413
↓
Dissolder
↓
Lead wire (black) #1067
Lead wire (orange) #1069
Lead wire (gray) #1063
Lead wire (white) #1065

Screw ⊕ #887 x 2
Screw ⊕ #884 x 2
Unit, take-up gear FA2-381

2-19 FPC Holder

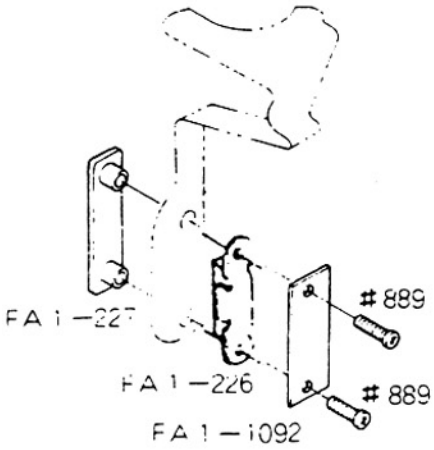

Dissolder
↓
Lead wire (red) #1085

Screw ⊕ #889 x 2
Circuit board B FA1-1092
Holder FA1-226
Base plate FA1-227

2-20 Shutter Speed Selector

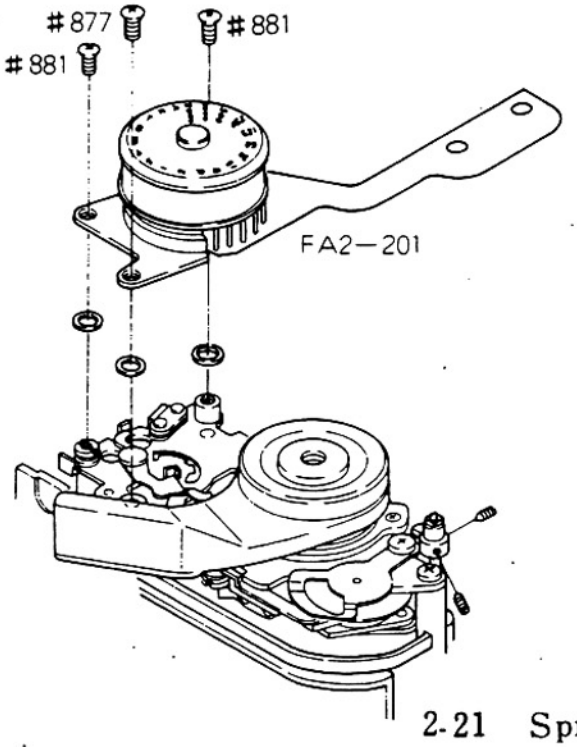

Screw ⊕ #887 x 2
Screw ⊕ #877
Shutter speed selector unit FA2-212

Note: Use care to Washer, which installed under FA2-212.

2-21 Sprocket

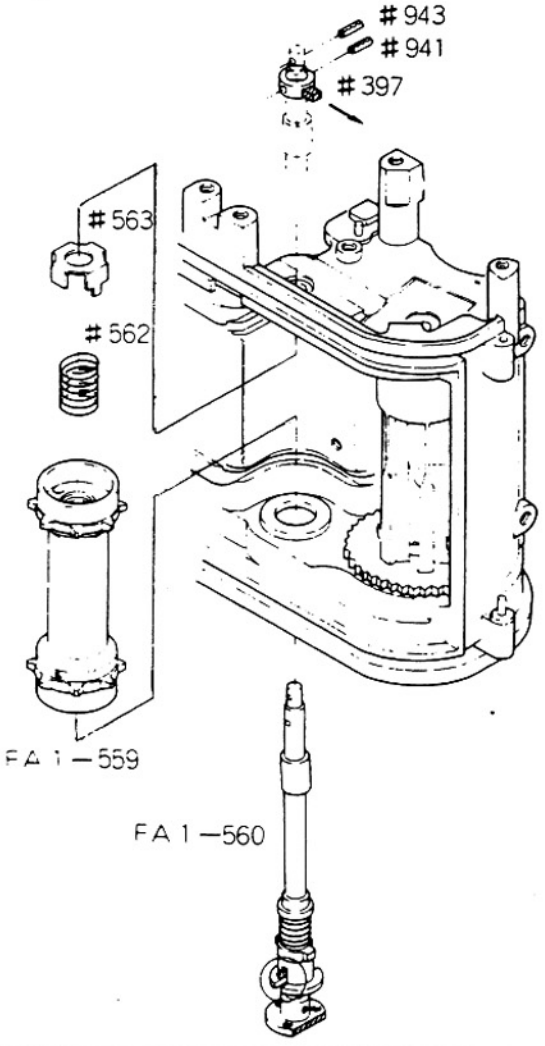

Spring cotter #943
Spring cotter #941
Take-up stopper #397

↓

Sprocket shaft FA1-560

↓

Note: When removing FA1-560, hold Sprocket with fingers

Holder #563
Spring #562
Sprocket FA2-559

Note: Use care not to lose #562.

2-22 FPC (Unsoldering)

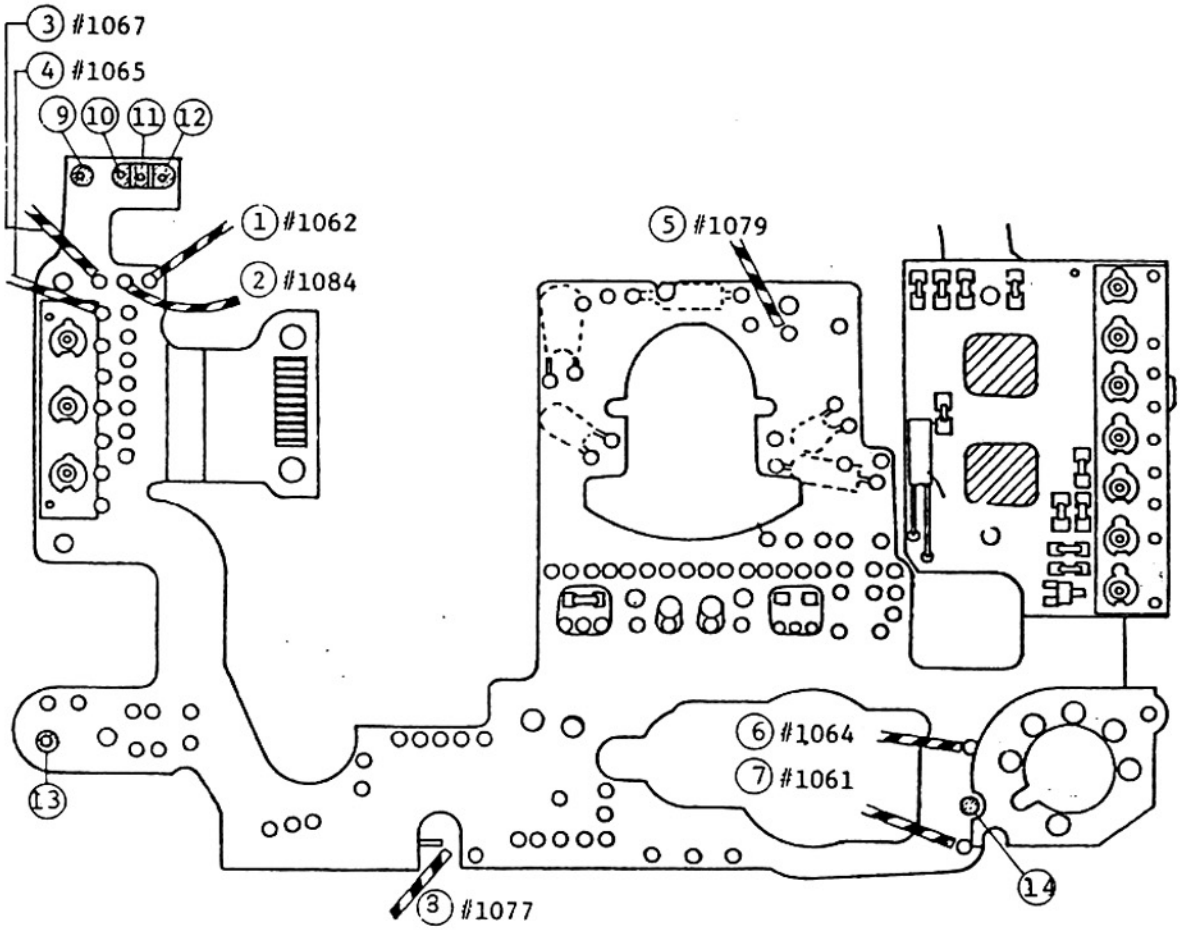

Unsolder

① Lead wire (yellow) #1062
② Lead wire (blue) #1084
③ Lead wire (black) #1067
④ Lead wire (white) #1065
⑤ Lead wire (black) #1079
⑥ Lead wire (black) #1064
⑦ Lead wire (red) #1061
⑧ Lead wire (gray) #1077

⑨ Terminal Closing curtain MG
⑩ Terminal Vccl
⑪ Terminal Trigger SW
⑫ Terminal Closing curtain SW
⑬ Terminal Vccl
⑭ Terminal Film-advance completion SW

Note: Remove the terminals with a solder-joint sweeper.

2-23 FPC

Note: Careful - FPC is a fragile part. Use a pair of cotton gloves to touch it. Probing fingers can cause instant damage of the variable resistors or the infrared-solder joints.

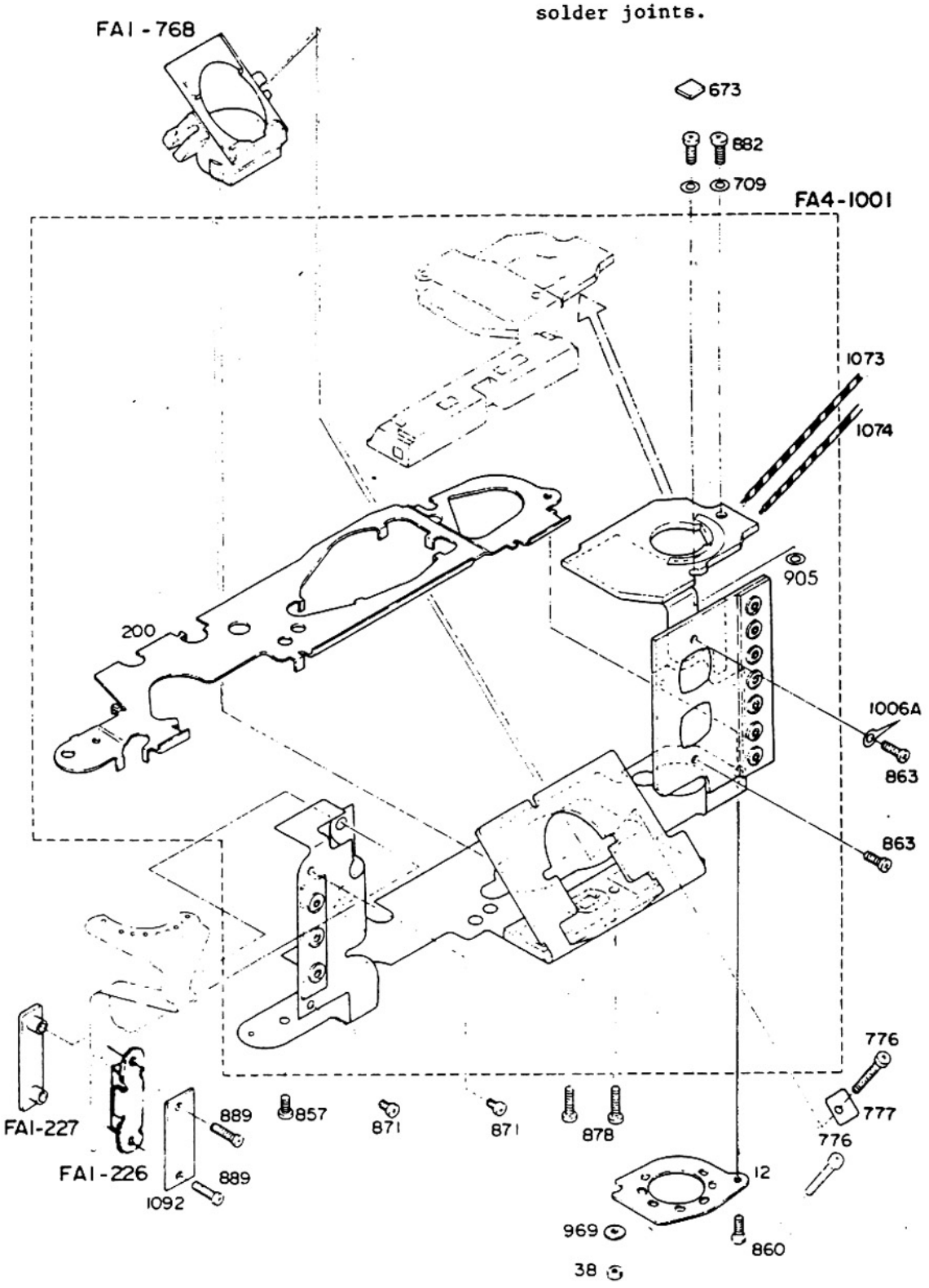

2-24 Incomplete Gear

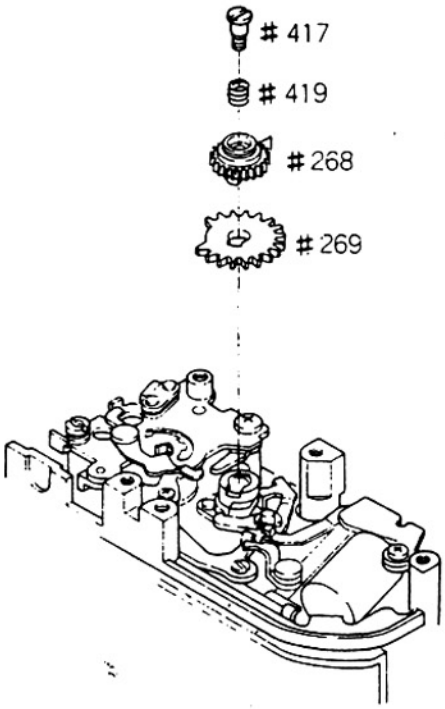

Screw ⊖ #417
Spring #419

↓

Take-up gear #268
Spring #369

↓

Incomplete gear #269

2-25 Connecting Shaft/Shutter Unit

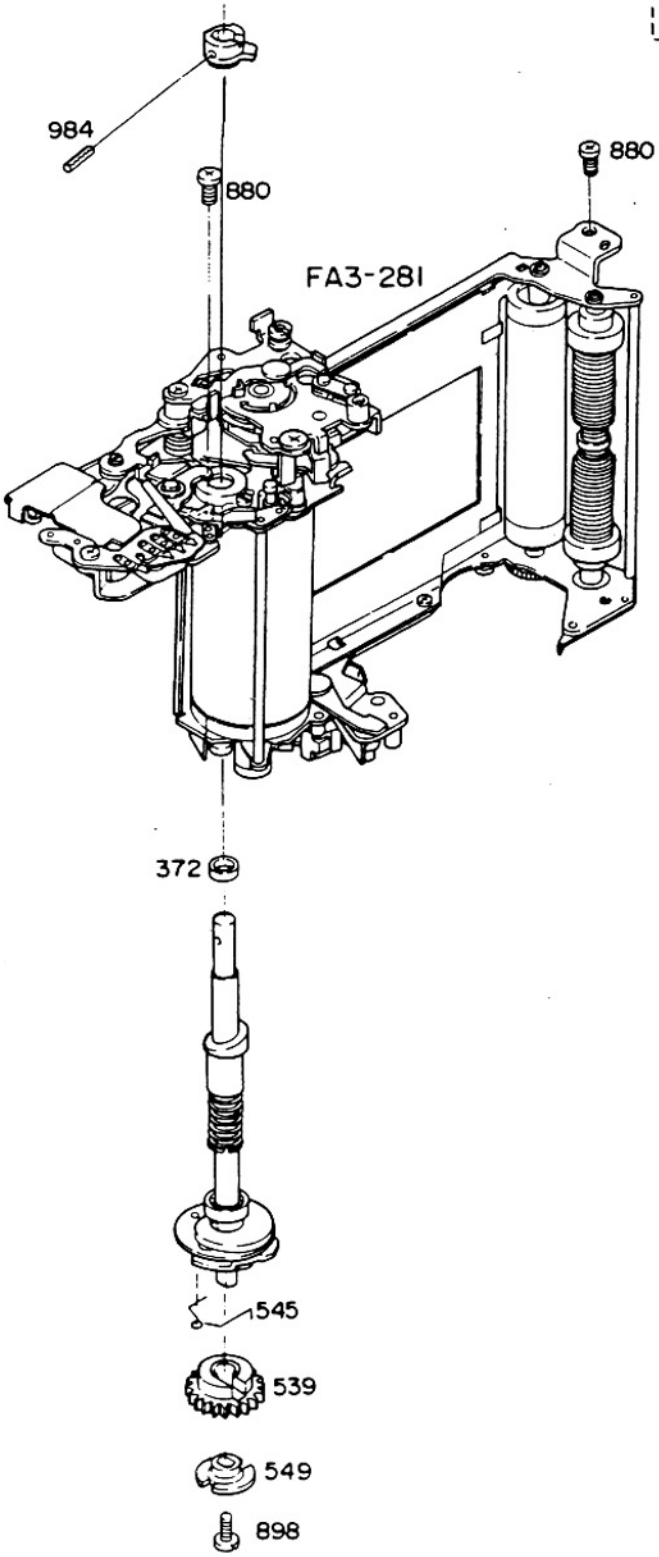

Spring cotter #984
Take-up stopper #271

Note: Do not use the spring cotter again, which once installed.

↓

Connecting shaft FA1-548

Note: Lift off from the bottom of the camera body.

↓

Collar #372

↓

Screw ⊕ #880 x 2
Shutter assembly FA3-281

Note: Unscrew #880, with placing Take-up stopper #300 aside.

Section 3 Assembly & Adjustment

Content

Section 3

Content

3.1 Unit, film-advance completion signal

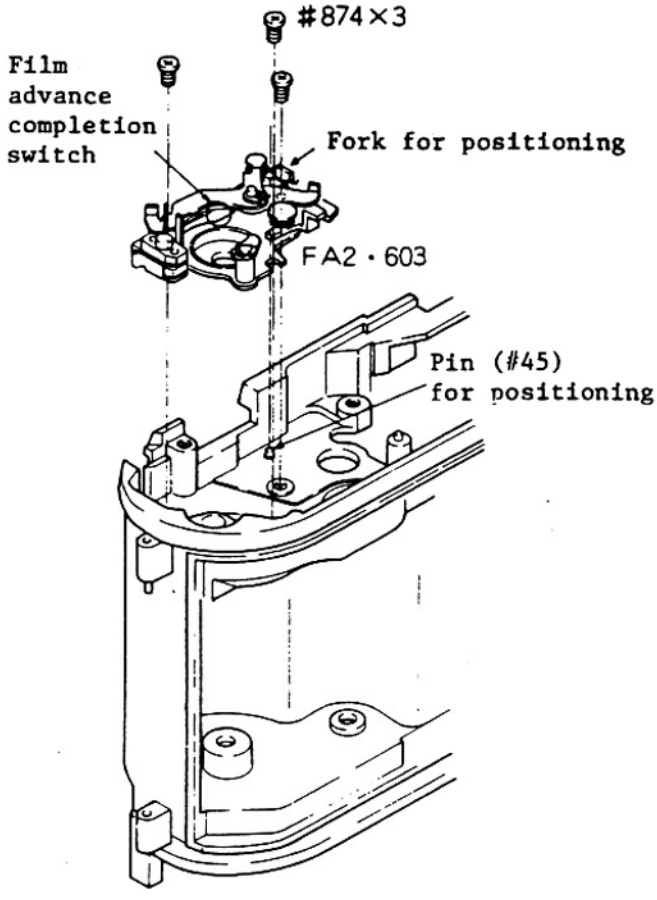

fig. 1-1 Body, wind side; with bottom up

Body die-casting
↓
Unit FA2-603,
Screw ⊕ #874 x 3

Install #603 in place, after catching Pin (#45) with the fork for positioning. (See fig. 1-1.)

Install Spring #614 as shown in fig. 1-2.

Adjust the space gap between Switch #601 and Switch #602. (See P. A6)

Check the smooth movement of Lever #597, Set lever #593 and Lock lever #613. (fig. 1-2)

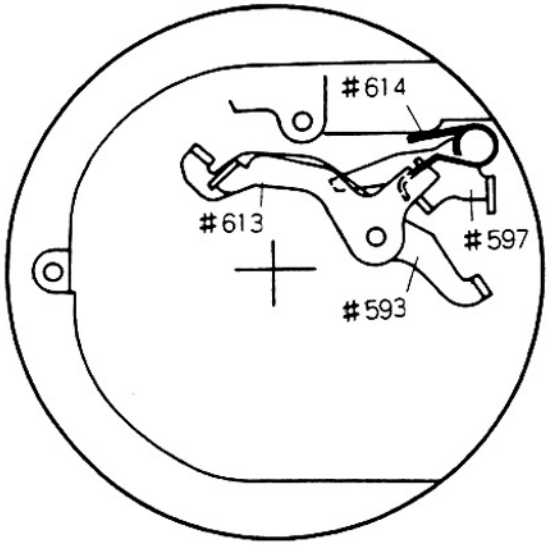

fig. 1-2 Body, wind side; bottom

3-2 Spool

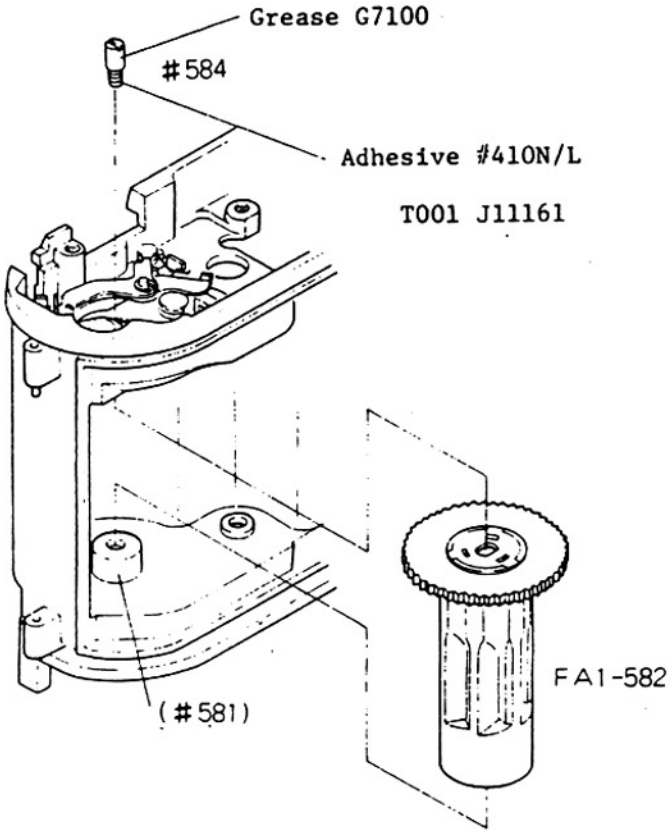

fig. 2-1 A2 Body, wind side; with bottom up

Body die-casting
↓
Spool FA1-582
↓
Upper spool shaft #584 ⊖

Apply Lock-fight 410 N/L onto the screws of Spool holder #581.

Note: Use a long-blade screwdriver to install #584. (J11161)

3-3 Sprocket

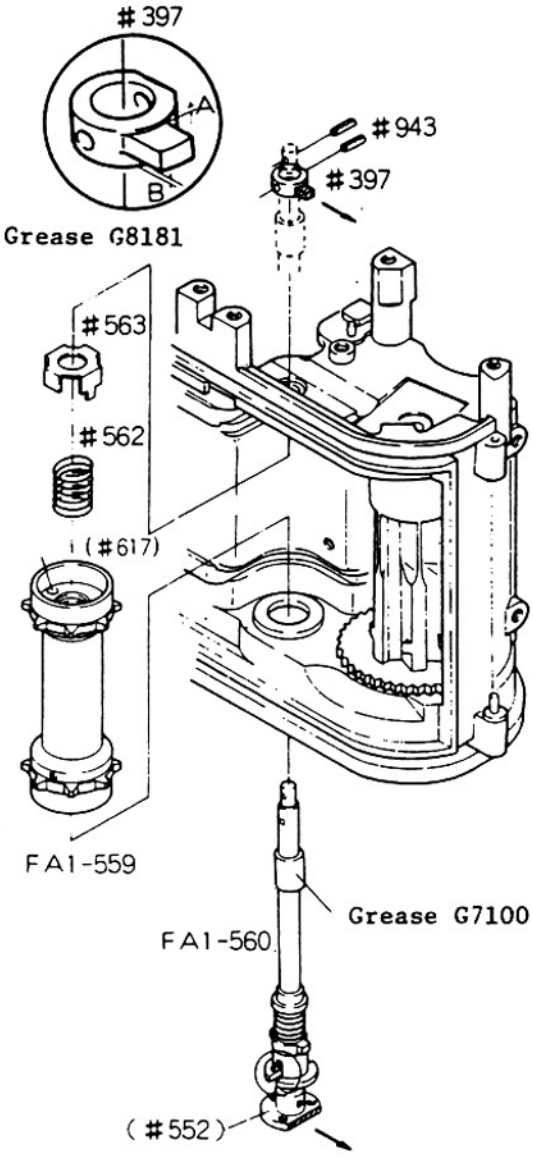

fig. 3-1 Body, wind side

fig. 3-2

Body die-casting

Use G8181 to lubricate the mating surfaces of Top bearing #564 and Holder #563.

Holder #563
Spring #562
Sprocket FA2 — 559

When installing #563 into #559, use care to drop the two protrusions into the holes. (See fig. 3-1.)

Sprocket shaft FA1 - 560

Pass #560 through the sprocket, after putting Sprocket pin #554 into the groove of Rewind button claw #555. (See fig. 3-2.)

Take-up stopper #397

Watch out for the relative positioning between #397 and Disk #552 as shown in fig. 3-1

Spring cotter #943

Use Pliers J15081 to pass #943 through #397 and #560, with the holes aligned.

Note that the positioning of the sproket teeth is referred to P. A12 .

Spring cotter #943

(Use Pliers J15081 to pass #943 through #560.)

Protrusion of #943 through the sprocket shaft should be equal at the both ends.

Check the sprocket for smooth rotation.

3.4 Shutter Assembly

Body die-casting

↓

Shutter assembly FA3-281, Screw ⊕#880 x 2

1) Placing the protrusion of #397 aside makes it easier to install the shutter.

2) Install the shutter, aligning the positioning holes with Pin #42.

   Note that when replacing the shutter, it is not necessary to make adjustments for its accuracy. A spare shutter is fully adjusted at factory to ensure proper operation.

   However, be sure to check #300 for engagement and Contact #323 for its ON-timing. (See P. A7)

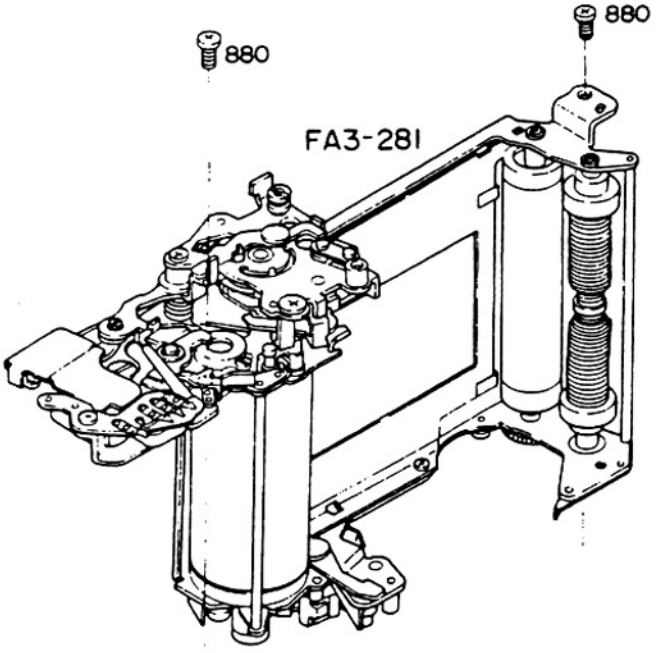

3.5 Connecting Shaft

Body die-casting

↓

Collar #372
Connecting shaft FA1-548

↓

Note that when replacing either #548 or Take-up stopper #271, change both of them at a time.

Take-up stopper #271

1) Turn Take-up disk (#543) until it positions at the final stage of film-advancing. (Lever #597 is being engaed with #543.) See fig. 5-1.

2) Install #271 in place as shown in fig. 5-2.
Use Tool J14017.

↓

Spring cotter #945, Tool J14017

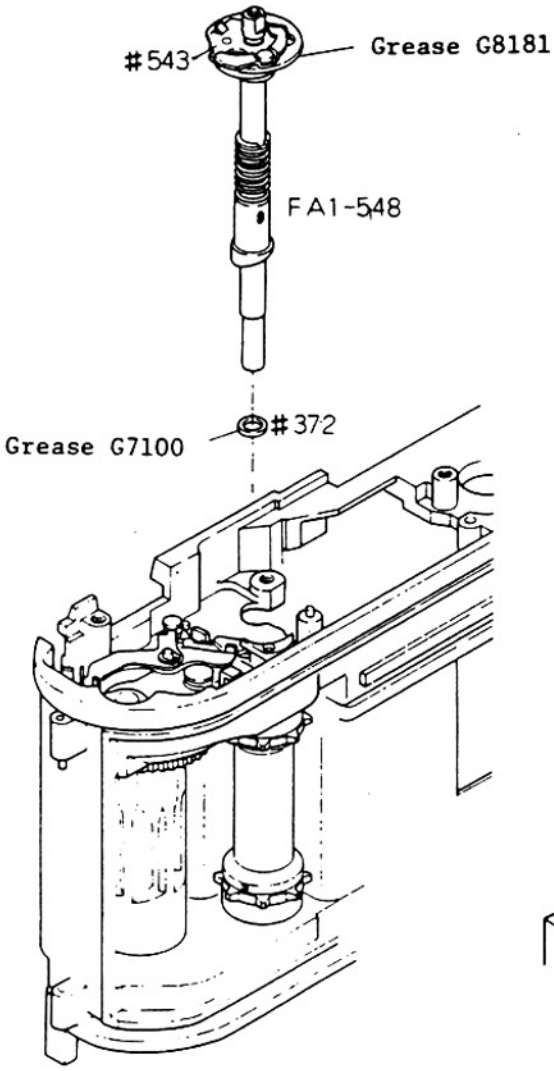

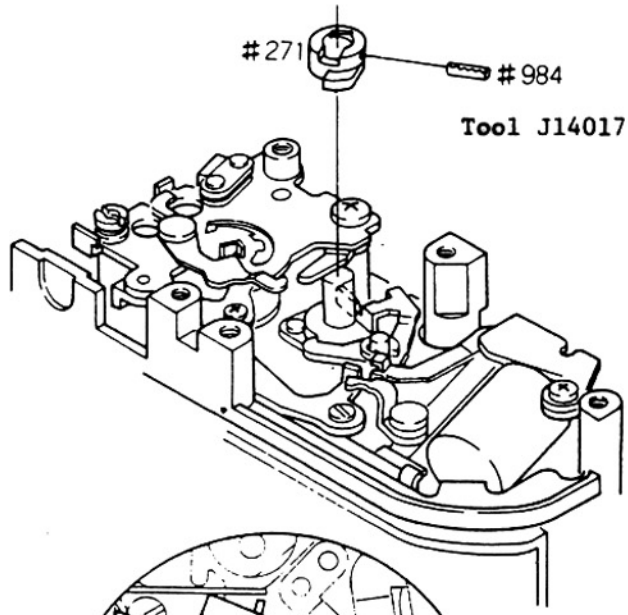

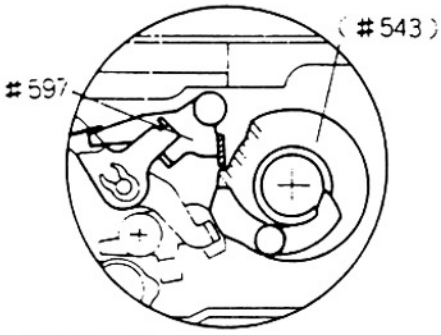

fig. 5-1 Body, wind-side, bottom

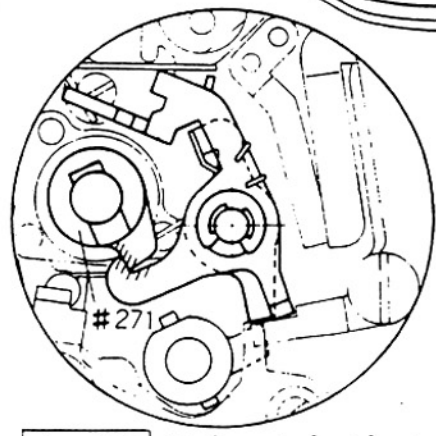

fig. 5-2 Body, wind-side, top

3-6 Switch, film-advance completion signal

Use a ohmmeter to check the switch for its ON - OFF timing. Connect the test prod positive to Switch B #602, and the negative to the camera body.

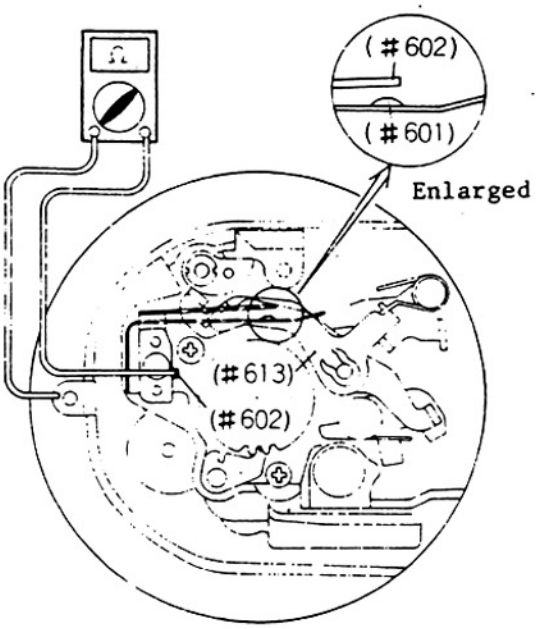

fig. 6-1 Body, wind-side, bottom

Film-advancing cycle	ON/OFF	Clearance between the contact blades	fig. No.
End	OFF	0.5 - 0.8mm	6-2
Shutter release	OFF	0.5 - 0.8mm	6-2
Start	ON	0	6-3
Halfway	ON	-0.2 - -0.3	6-4
End	OFF	0.5 - 0.8	6-2

Adjustments can be made by bending the contact blades.

fig. 6-2 End of film-advancing

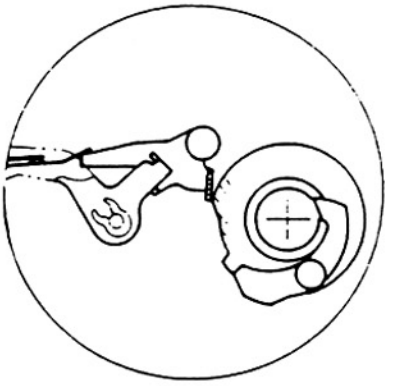

fig. 6-3 Start of film-advancing

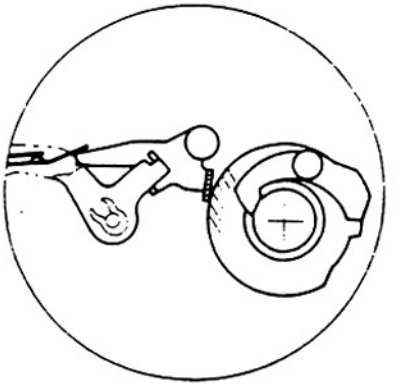

fig. 6-4 Halfway of film-advancing

3-7 Take-up Stopper #300's Engagement & Contact #323's ON-timing Adjustment

Take-up Stopper #300's engagement

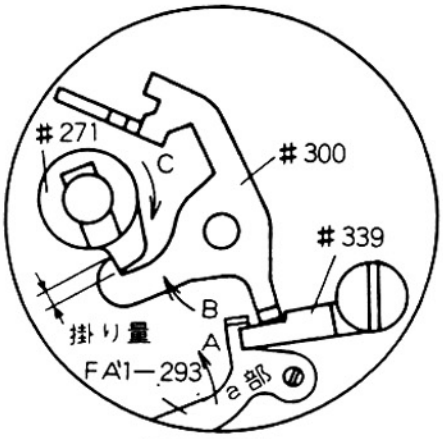

fig. 7-1

1) Set Take-up stopper #271 to the shutter-cocked condition.

2) Engage Section ⓐ of Charge lever #293 with Time lever (#238).

3) Engage Take-up stopper #300 with Lever #339, turning in the direction A.

4) Placing #271 in the direction B to be engaged with #300, check the depth of engagement.

Depth of engagement between #271 and #300 to be 0.6-0.9mm.

Note that when the disengagement between #271 and #300 occurs, the film-advance lever fails to advance the film and cock the shutter even when fully stroked.

Contact, closing curtain switch #323's ON-timing

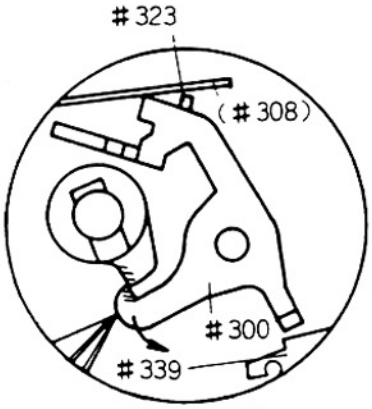

fig. 7-2

Disengage #339 from #300 by holding #339 with a tweezers to reverse slowly. At this time, see if #323 turns on after #300 unlatches #271.

Adjustment can be made by bending Spring #308.

Note that when the ON-timing is too early, the motor drive stops working with its safety device: the start signal of film-advance must not be transmitted to the motor drive before #300 unlatches #271.

3-8 Take-up Gear & Incomplete Gear

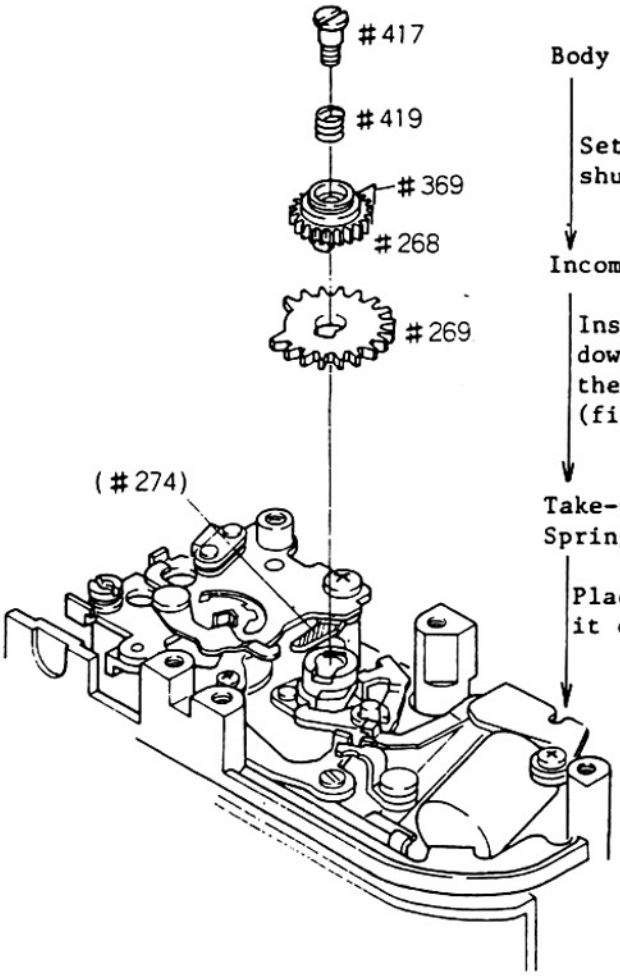

Body die-casting

Set Connecting shaft FA1-548 to the shutter-cocked condition. (fig. 5-2)

Incomplete gear #269

Install #269 with the concave facing downward, using care to align #271 with the connecting groove of #269. (fig. 8-2)

Take-up gear #268
Spring #369

Placing Bound-proof claw #274 aside makes it easier to install #268.

Spring #419
Setscrew ⊖ #417

fig. 8-1 Body, wind-side, top

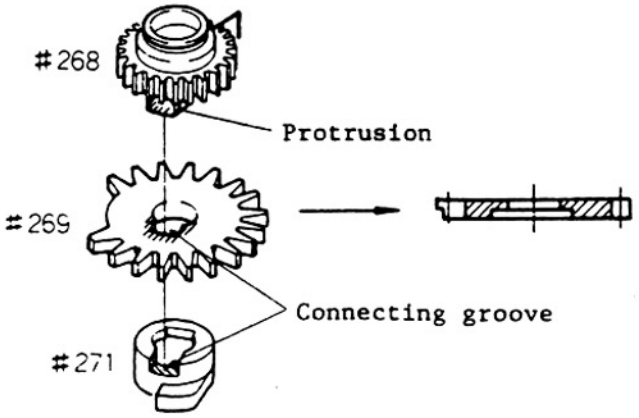

fig. 8-2 #269 installation

3-9 Lower Gear, Connecting shaft • Rewind Lever & Axle, multi-exposure

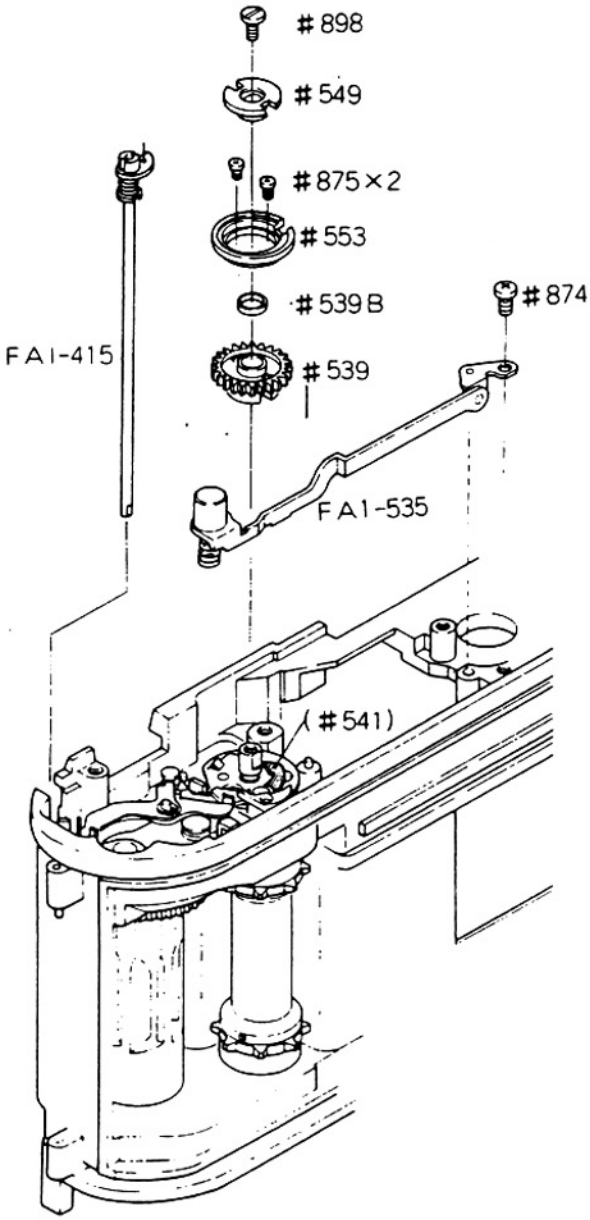

fig. 9-1 Body, wind-side; with bottom up

Body die-casting

↓

Lower gear #539

Place Take-up claw #541 aside when installing #541.

↓

Collar #539B
Spacer #553

Temporarily fix with Screw ⊕ #875 x 2
For adjustment, reter to P. A13 .

↓

MD coupling #549

Temporarily fix with Screw ⊕ #898.

↓

Rewind lever FA1-535
Screw ⊖ #874

Check the riwind button for smooth movement after installing Unit base FA1-565.

↓

Axle FA1-415

Engage Spring #592 as shown in fig. 9-2

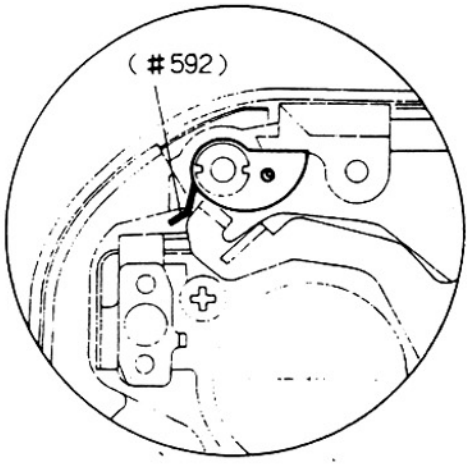

fig. 9-2 Spring #592

3-10 Sprocket gear, Lower Spool Shaft & Unit Base, sprocket

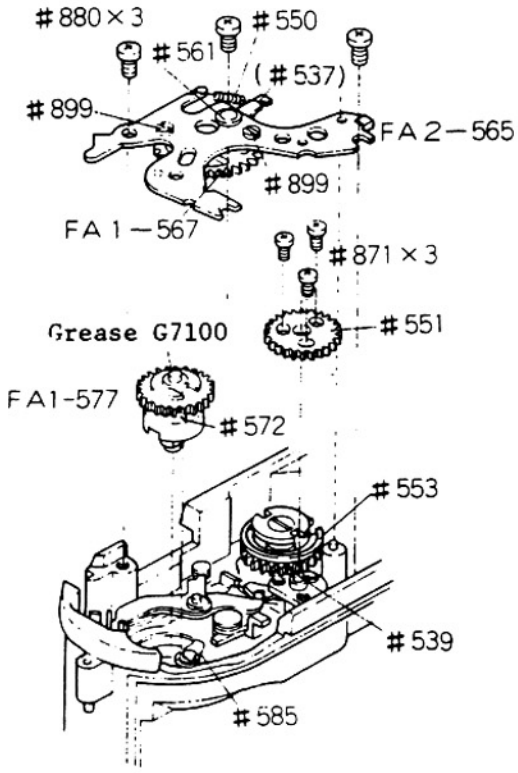

fig. 10-1 Body, wind-side, ~~top~~

Body die-casting

↓

Sprocket gear #551
Screw ⊕ #871 x 3

Set FA1-548 to the shutter-cocked condition and engage #551 with Lower gear #539, being careful to align the screw hole with the center of the oval hole.

Further adjustments of #551 should be made according to P. A12 .

↓

Spool friction FA1-577.

Put Spring #572 into the cut-out of Spool reverse stopper #585.

↓

Unit FA1-565
Holder FA1-567
Screw ⊕ #880 x 3

Catch Pin #46 with the positioning hole when installing FA1-565.

The rotation of Spool idler #569 is adjustable by re-locating FA1-567.

Prior to adjustment, Screws #899 x 2 should be loosened.

↓

Spring #550

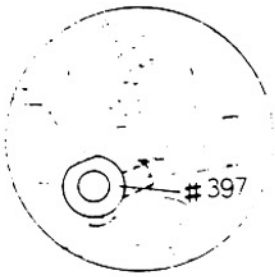

fig. 10-2

3-11 Unit, take-up gear

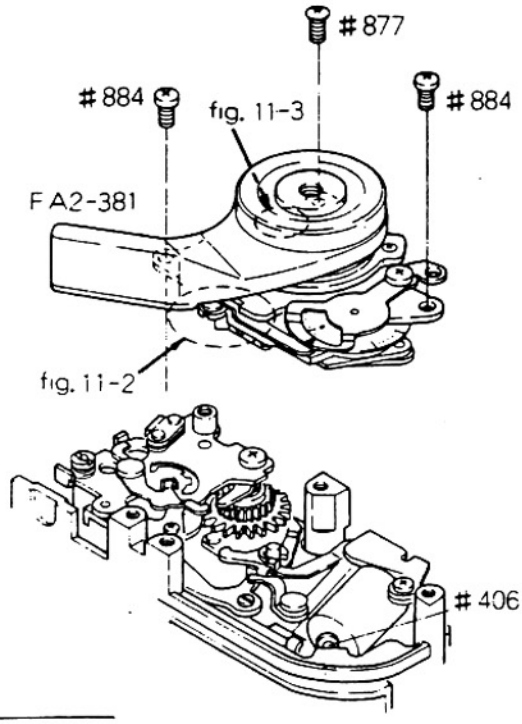

fig. 11-1 Body, wind-side, top

Body die-casting

Set the camera body to the shutter-cocked condition. Check to see if Pin #406 is installed.

Unit, take-up gear FA2-381

Turn Frame counter coupling (#396) to set Eccentric pin #394 as shown in fig. 11-2.

When installing, engage Spring #369 with the cut-out of Reverse stopper claw #418. (See fig. 11-3.)

Screw ⊕ #877
Screw ⊕ #884 x 2

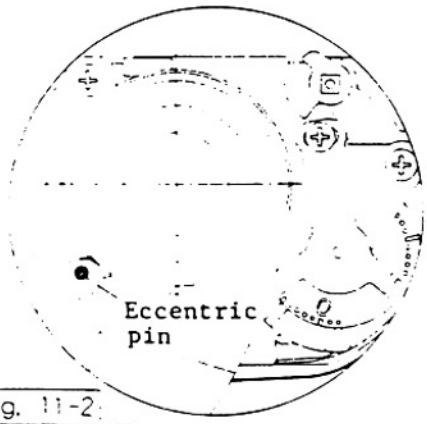

fig. 11-2 Eccentric pin #394

Check points

1) Make sure that #369 will not dislocate when stroking the film-advance lever with a series of strokes.

2) Check the frame counter for proper operation by stroking the film-advance lever slowly or swiftly.

3) See if the frame counter will smoothly return to the start position when opening the camera back.

4) See if index aligns with the calibrations properly.

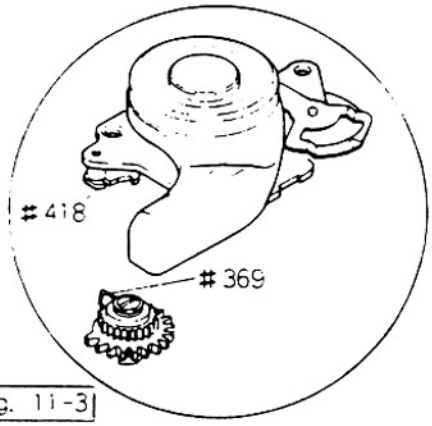

fig. 11-3 Reverse stopper claw #418

3-12 Sprocket Gear Engagement

3-12-1 Sprocket Gear Engagement

1) Hold the camera body upside down and keep the film-advance lever at the fully-stroked position by your thumb. Then, loosen three Screws #871 to latch #271 with #300. (fig. 12-2)

3-12-2 Plate, sprocket lower gear engagement

2) Turn the sprocket toward the spool until it is stopped by the interference of #397 with #340.
At this time, re-tighten #871, with #551 placing in the direction of arrow. (See fig. 12-2.)

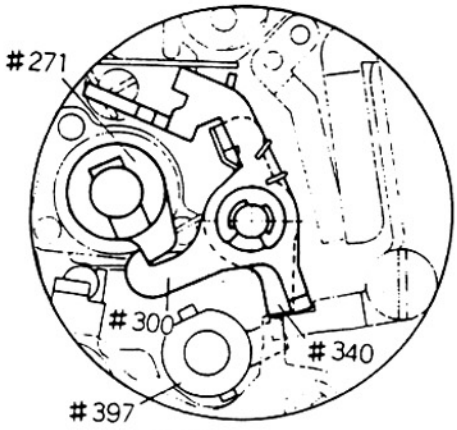

fig. 12-1

Note that #271 should be stopped by #300, before #397 is stopped by #340.

Play of the tip of sprocket tooth to be 0.4 - 0.8mm after film-advancing.

See P.9 of Repair Manual of FE. Positioning of the sprocket teeth can be made in the same procedure as the FM and the FE.

Standard: 31.85 ± 0.4mm

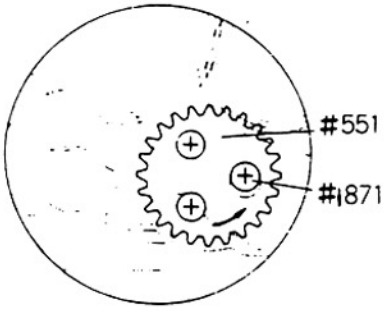

fig. 12-2

When using J18064, be sure to scribe new reference line for 40FB as shown in fig. 12-3.

To avoid loosening after installation, be sure to drill a small hole at the bottom of one of the threaded holes for #936, then drive #936 securely.
Also apply adhesive #410 B/M onto other two #936s.

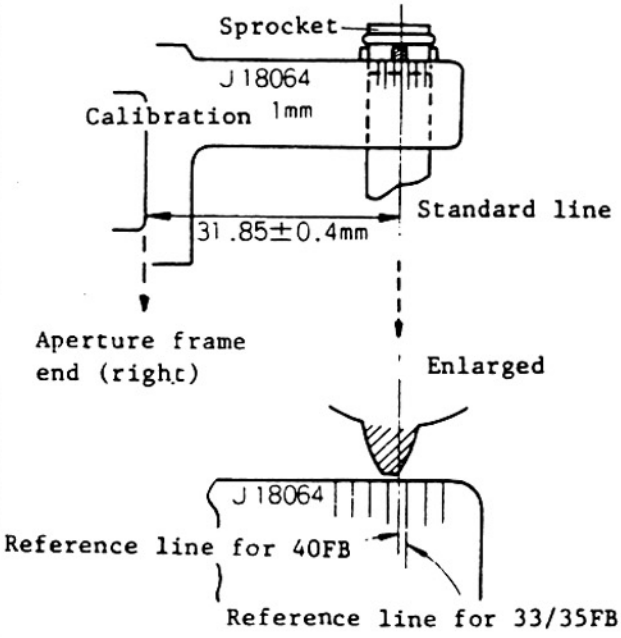

fig. 12-3 J 18064

Sprocket Teeth Positioning

After cocking the shutter, hold the film-advance lever by your finger. And then, place the sprocket toward the rewind side to check the clearance between Plate #553 and Stopper #537.

Standard: 0.1 - 0.3 mm

Adjustments can be made by re-locating #553. After loosening Screws #875, apply a locking agent onto #875. But use care not to over-tighten #875.

SUPPLEMENT: SPROCKET TEETH POSITIONING

To avoid loosening of sprocket or to simplify the positioning procedure, four openings are made around Sprocket inner tube #556 and one of Setscrews #936 is eliminated.

Sprocket teeth positioning with this new inner tube can be made by selecting the alignment of two through-holes of sprocket with four openings of inner tube. See the figure.

First align through-hole A with opening 1 and then use J18064 to measure the deviation of sprocket teeth. Unless the deviation is within ±0.34mm, the alignment should be changed according to the crossreference table.

After positioning, screw Pin #557 and Setscrew #936 respectively into the through-holes.

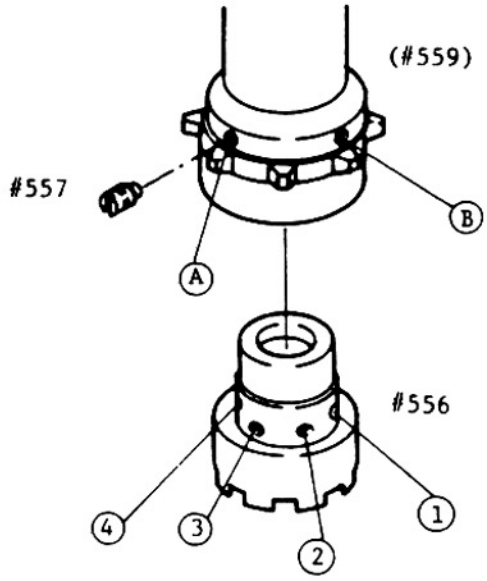

Deviation (mm)	Alignment
-2.70 ~ -2.41	A → 3
-2.40 ~ -1.72	B → 4
-1.71 ~ -1.03	A → 4
-1.02 ~ -0.35	B → 1
-0.34 ~ +0.34	A → 1
+0.35 ~ +1.02	B → 2
+1.03 ~ +1.71	A → 2
#1.72 ~ +2.40	B → 3
+2.41 ~ +2.70	A → 3

3-13 Film-advance Mechanism Check and Adjustment

3-13-1 Film-advance

Check the film-advance lever for the series of shorter film-advancing and the smooth stroking.

See if the film-advance lever cannot be stroked unless the shutter is released.

3-13-2 Spool

Check the spool for the smooth rotation and the anti-reverse device (Reverse stopper claw #418).

The vertical play of the spool to be 0.2 - 0.3mm.

The spool friction can be measured in the same procedure as the F and the F2. For adjustments, replace FA1-577.

Standard spool friction: 200 - 330g

3-13-3 Spacer #553

With film-advance lever fully stroked with finger (Shutter cocked condition), check the clearance between Stopper #537 and Spacer #553 when rotating the sprocket as far as it will go in the direction of film-rewind.

Standard: 0.1 - 0.3mm

Adjustment is made by loosening screw ⊕ #857 x 2 and re-locating #553.
After adjusting, apply adhesive #616 onto #857. Do not overtighten #857.
(Adjustment will be soon simplified by installation of eccentric pin.)

3-13-4 Sprocket

Check the sprocket for play of the tip of its tooth. (Standard: 0.4 - 0.8mm)

The sprocket should reverse smoothly with the rewind button set to "rewind position".

3-13-5 Rewind Button

Check the rewind button for proper operation. It should be released by the film-advance lever stroking. The stroke of the rewind button should measure 3.1 ± 0.3mm from the surface of the bottom cover.
(The full stroke to be 3.8 ± 0.2mm)

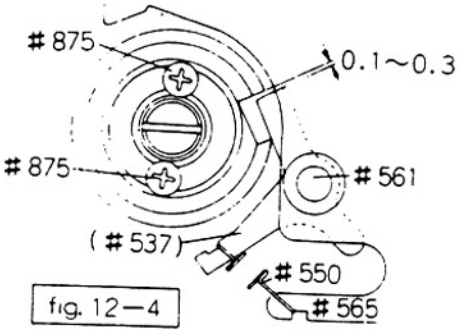

fig. 12—4

3-14 Coupler, multi-exposure

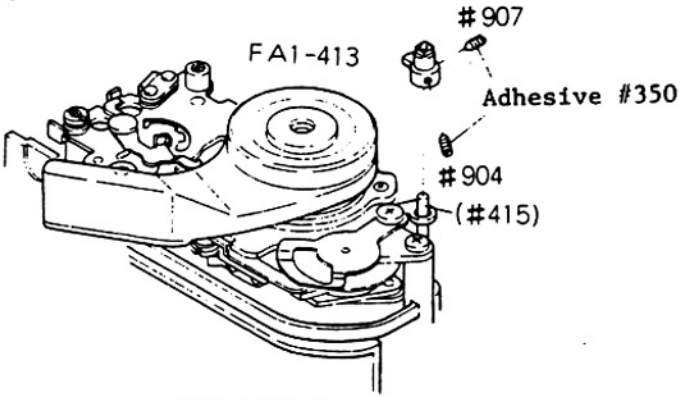

fig. 14-1
Body, wind-side, top

Body die-casting
↓
Coupler FA1-413
Screw ⊖ #904, ⊖ #907

1) Provide thrustward play of 0.1 - 0.2mm.

2) Install FA1-413 and secure with screws as shown in fig. 14-2.

3) Tighten screws in the order shown in fig. 14-2 (the side edge of the squared shaft's head parallels the edge of the camera body).

Fig. 14-3 shows where Spring #592 engages.

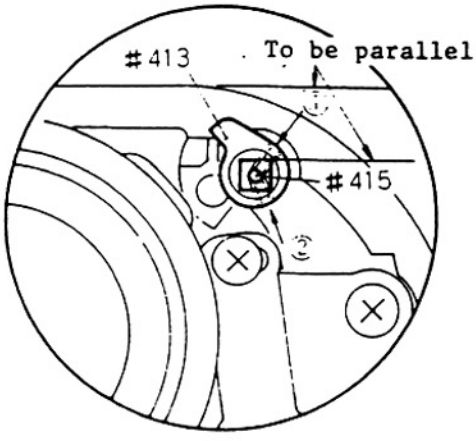

fig. 14-2
Coupler FA1-413

Check Points

1) Turn FA1-413 to set Cam #591. Then see if #591 will not be freed when the film-advance lever starts being stroked.

2) Check FA1-413 for proper setting and releasing. (See fig. 14-4.)

Adjustment can be made by replacing FA1-413.

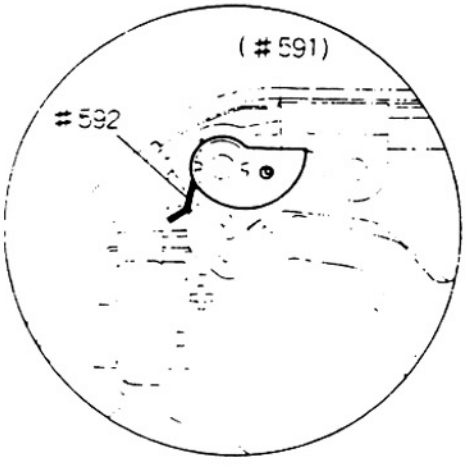

fig. 14-3 Spring #592

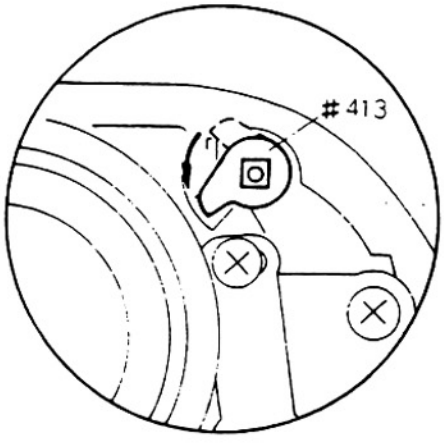

fig. 14-4

3-15 Mirror Cocking Lever

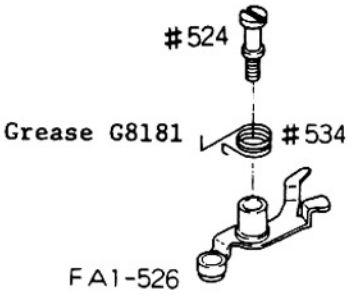

Body die-casting

↓

Mirror cocking lever FA1-526
Spring #534 (See fig. 15-2)

Use G8181 to lubricate the side face of Roller #527.

Set the camera body to the shutter-cocked condition.

When installing, place #527 against the side of (#547) under-neath (#543).

↓

Axel #524 ⊖

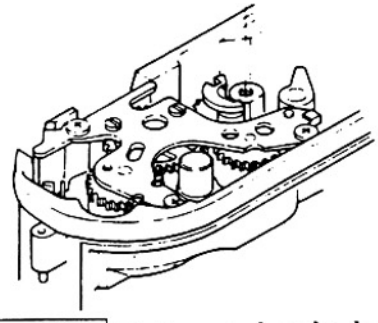

fig. 15-1 Body, wind-side, bottom

Surplus Movement of FA1-526

Standard: 0.4 - 0.8mm

Fig. 15-3 shows how to measure the surplus movement of FA1-526 at its maximum working distance for mirror cocking.

Adjustment can be made by changing the three levers of different size.

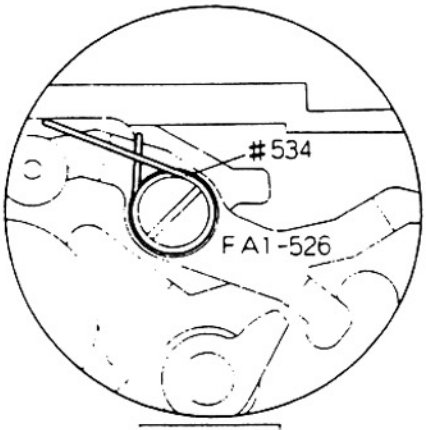

fig. 15-2

P/N	Mark	Surplus movement
FA1-526	Nil	
FA1-625	Black	+ 0.2 mm
FA1-618	Green	+ 0.4 mm
FA1-619	Red	- 0.2 mm

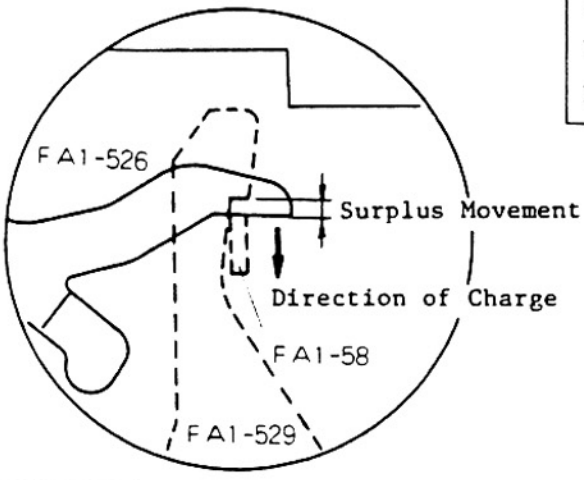

fig. 15-3

3-16 Shutter-release Button Stroke

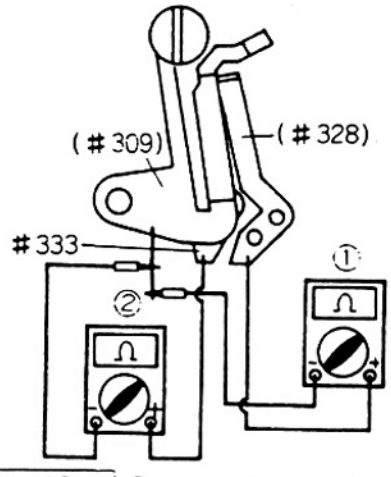

fig. 16-1 Connecting testers

Shutter-release button stroke is changeable by adjusting the timings of liquid crystal display and the release-magnet's operation.

Checking Procedures by Using a Tester

1) Tools required: Micrometer J15189
Tester J9006

2) How to connect a Tester

As depicted in fig. 16-1, connect two testers to Contact (#328), Release contact (#333), camera body respectively to check the ON/OFF timing of the release switch.

3) How to check

Remove Cover ring #349 and Screw J15189 on Stopper #348. Setting the position where the tip of J15189 just contacts the head of the release button to "Station 0", measure and check the following strokes. (See fig. 16-3.)

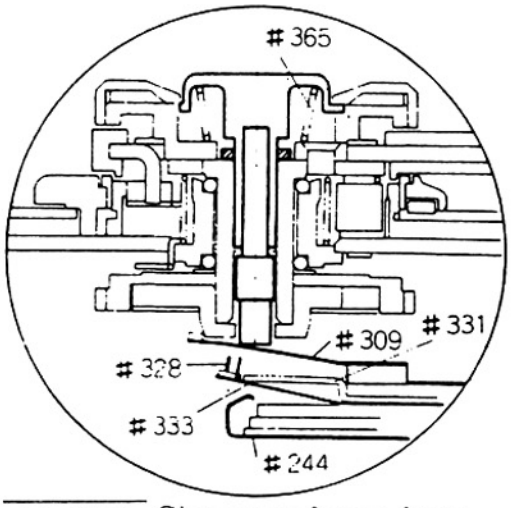

fig. 16-2 Shutter-release button; sectional view

Release-button Stroke

Stroke	Standard: mm	Tester ①	Tester ②
Normal condition		OFF	OFF
First stroke	0.5 ± 0.1	ON	OFF
Second stroke	1.2 ± 0.2	ON	ON
Play of Stroke	0.2 - 0.4	ON	ON

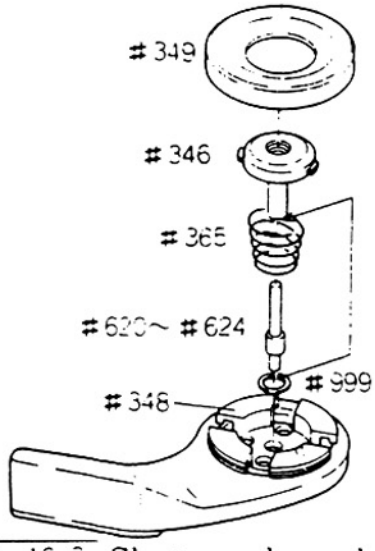

fig. 16-3 Shutter-release button

a) First stroke: Interval between the starting point and the point where Spring (#309) just touches Power switch contact (#328) when Release button #346 is slightly depressed. (Liquid crystal display will immediately appears.)

Identification groove

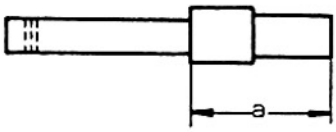

fig. 16-4 Release Shaft

b) Second stroke: Interval between the end of first stroke and the point where the power switch contact just touches Release contact (#333) when the release button is further depressed. The Release-magnet operates to release the shutter.

c) Play of stroke: Interval from the end of second stroke to the limit when the release button is fully depressed.

4) Adjustments

a) First stroke: Replace Release shaft with another one. Four replacement parts are available as listed below.

b) Second stroke: Bend Retainer #334.

c) Play of stroke: Add Washer #999.

P/N	Dimension a	Identification groove
621	6.4	1
622	6.5	2
620	6.6	nil
623	6.7	3
624	6.8	4

Note: #620 is standard.

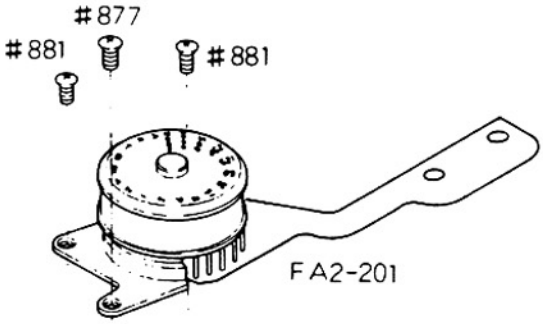

3-17 Unit, shutter-speed selector

Body die-casting

↓

Unit FA2-201
Screw ⊕ #877
Screw ⊕ #881 x 2

↓

Before installation, set the shutter-speed dial to "T" (Time Exposure).

1) After installation, check to see if "Time Exposure" is securely done.

2) Check that "Time Exposure" is cancelled (i.e. Closing curtain starts traveling) immediately before the shutter-speed dial is set back to X or B click-stop setting.

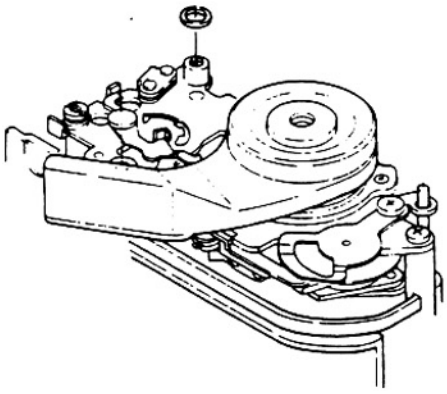

fig. 17-1

Body die-casting, wind side

3-18 FPC Installation

Prior to FPC installation, temporarily assemble Front plate unit to Body die-casting and check the opperation referring to 19 & 20 (p.p. A19 - A20).

3-18-1 Precautions on FPC

1) Do not handle roughly; Ceramic 1005 and the infrared-soldering portions are prone to separate.

2) When installing, be sure to use cotton gloves.

3) Be sure to earth the soldering iron to prevent damage to IC by leak current.

4) Do not touch variable resistors with bare hands.

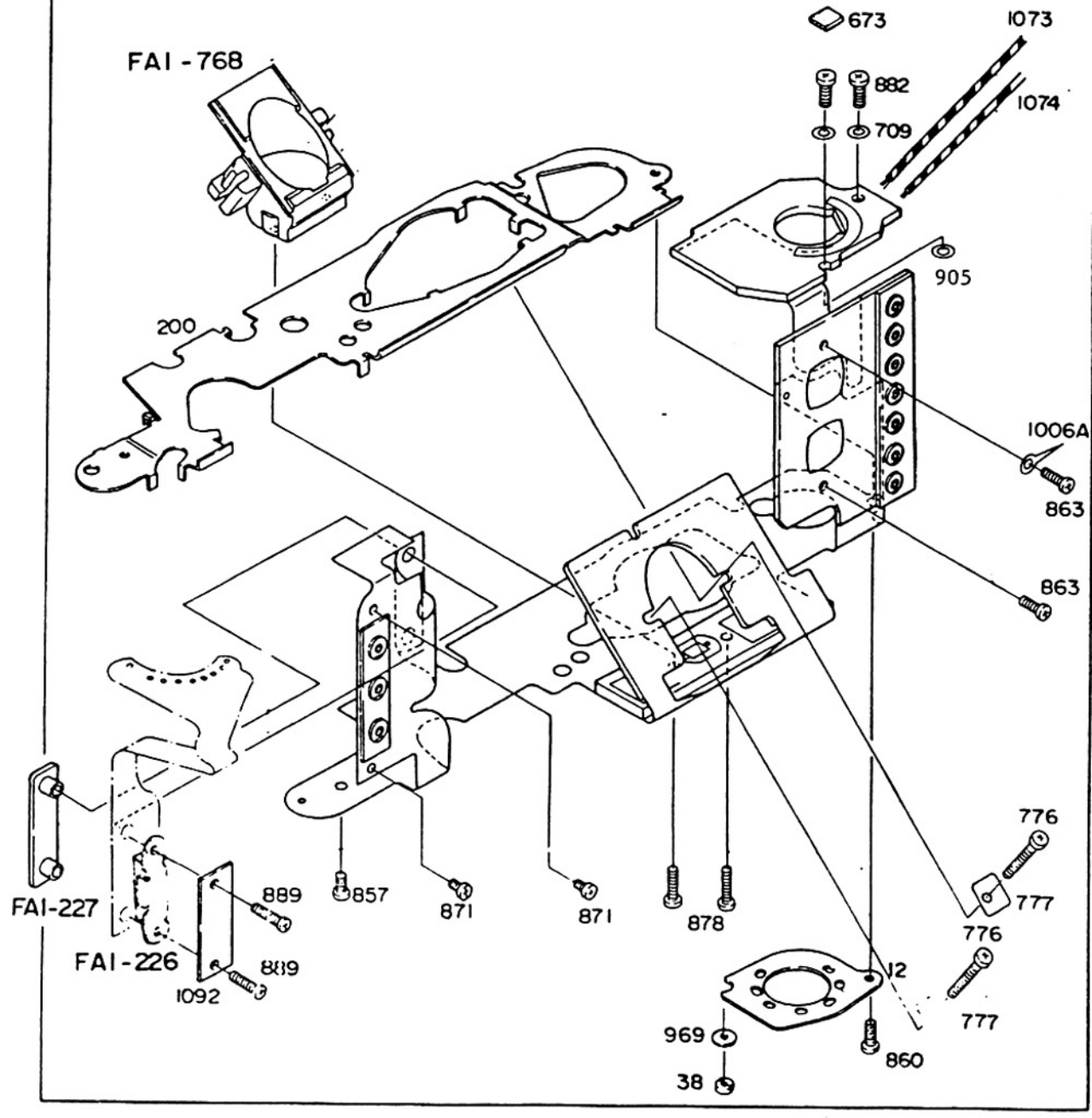

3-18-2 Installation

Install Holder FA1-768 into FPC FA1-1001 and secure with Screw ⊕ #878 x 2

↓

Camera body

↓

Ceramic, exposure information #1005
Washer #709 x 2
Screw ⊕ #882 x 2

1) Do not overtighten screws; Ceramic is prone to crack.
2) Use care not to separate the infrared-sodering joints.

↓

Quartz oscillator #1006-1
Screw ⊕ #863 x 2
Lug, ground #1006A (Unnecessary if FPC is equipped with ground terminal)

↓

Holder FA1-768

As illustrated, route Lead wire #1079(black) through the notch of Holder for soldering.

↓

FA connector #771
Screw ⊕ #776 x 2

↓

Resistor block #1009
Screw ⊕ #871 x 2

↓

FPC, bottom

Position aligning two soldering hole on FPC with Switch B #602 and MD switch #37 respectively.

↓

Screw ⊕ #857

↓

Cover, MD connector #12
Screw ⊖ #860

↓

Washer #969
Nut #38 (Tool required; J11122)

↓

Base plate FA1-227

1) Prior to installation, clean the mating surfaces of FPCs.
2) Mate the pressure-contacted portion of shutter-speed selector(FPC-4 #1032) with that of FPC-1 #1001, then position them aligning holes of FPCs with Shafts #228.

↓

Holder FA1-226

Install, being careful to its direction. See Fig. 18-1.

↓

Circuit board B FA1-1092

↓

Screw ⊕ #889 x 2

3-18-3 Lead Wire Soldering

1) Lead wire #1061, battery plus (Red)
2) Lead wire #1064, battery minus (Black)
3) Terminal, film-advance completion switch
4) Terminal, MD switch
5) Lead wire #1069, release switch (Gray)
6) Lead wire #1062, power swith A (Yellow)
7) Lead wire #1063, power switch B (Gray)
8) Terminal, slosing curtain magnet minus
9) Terminal, closing curtain magnet plus
10) Terminal, trigger switch
11) Terminal, closing curtain switch

Note: FPC should be firmly installed, free from detaching.

12) Lead wire #1084, B unit base (Blue)
13) Lead wire #1085 (Red)
14) Lead wire #1079, data contact (Black)

3-18-4 Liquid Crystal Display Operation Checking

After completing soldering mentioned above, check the operation of LCD by using tool battery or battery.

Tool: J15148-1 (Modify the mount base referring to RJ infomation issued separately)

Shutter-speed dial setting		Check Point	
Manual	2000 - 1/2	$^{-}$M2000 - $^{-}$M2	Correct LCD should appear in accordance with setting.
	1 sec. - 8 sec.	$^{-}$M1^{-} - $^{-}$M8^{-}	
	B, T	M^{-}	
Auto	A	$^{-}$8^{-}	
Correct exposure display		When Lead wire #1078 (brown) is touched to the mating surface with #706 of Ceramic #1005, the display should change as follows: $^{-}$8^{-} → $^{+}$2000	

3-19 Body Assembly & Front Plate Assembly

As for Front plate assembly, refer to P. (S5)

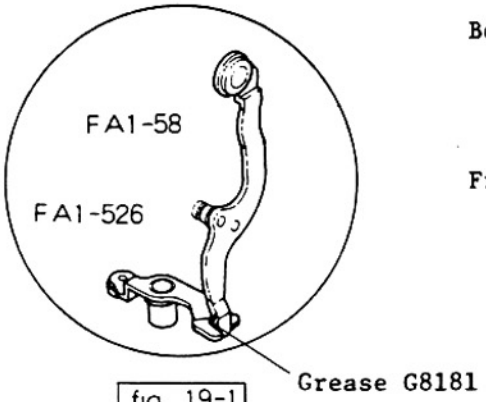

fig. 19-1

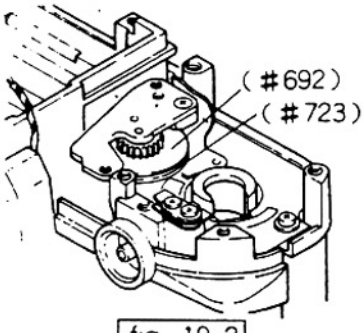

fig. 19-2

Body assembly

Before installation, set the shutter unit in the cocked condition. Also loosen Axle #524.

Front plate assembly

1) Apply G8181 to the mating surfaces of Vertical lever FA1-58 and Mirror cocking lever FA1-526.
2) Make sure that Aperture coupling thread (#732) is rolled around the grove of Winding roller (#692).
3) Insert the driver from the bottom of camera body (Area shaded in fig.20-3) and disengage Quick-return lever #529 from Vertical lever #58, then install Front unit base in place so that Mirror cocking lever engages with Vertical lever #58 as shown in fig. 20-3.

Screw ⊕ #909 x 2, ⊕ #892 x 2, ⊕ #883 x 4

Before tightening, closely fit the left lower part of Front unit base to Body die-casting (in the direction of arrow in fig. 20-4). Tighten screws in the sequence numbered in fig. 20-4.
After installation, check the unit (referring to p. A22).

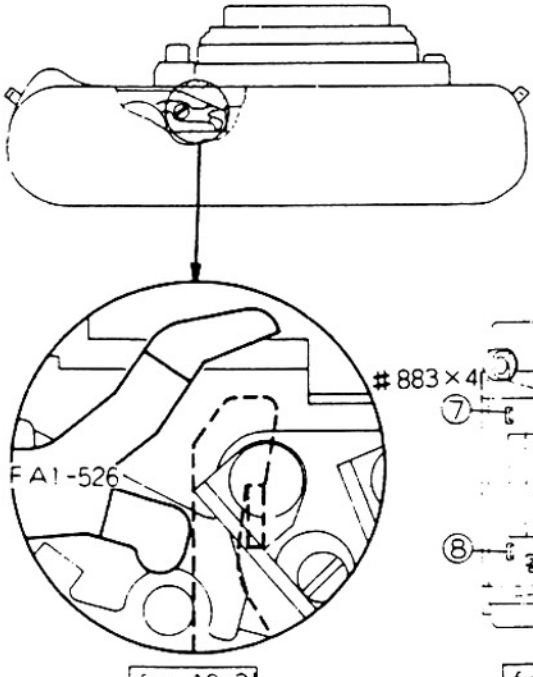

fig. 19-3

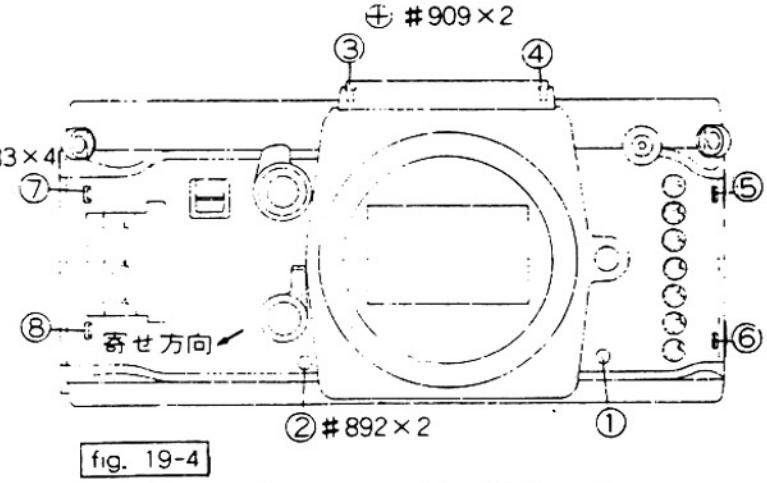

fig. 19-4

Front plate assembly Fixing Sequence

3-20 Checking Procedures after Front Plate Assembly Installation

3-20-1 Reflex-mirror Operation

The reflex-mirror should be securely cocked.

Apply finger-pressure slightly onto the reflex-mirror and depress the shutter-release button, then gradually raise the reflex-mirror by releasing finger-pressure. With this method, check the reflex-mirror for smooth up and down movement.

3-20-2 Mirror-rising Position

In the same manner mentioned on item 1), check the internval between the top surface of the reflex-mirror and Mirror-Stopper #138 immediately when the opening curtain travels.

Standard: 7.3 - 9.3mm

For adjustment, bend the tip of Signal lever #64.

3-20-3 Mirror Lock-up Position

After mirror locking-up, release the shutter a few times to check the clearance between the reflex-mirror and the mirror stopper.

Standard: Less than 0.3mm

Adjustment is possible by bending Lever #62.

3-20-4 Stop-down(Depth-of-field preview)Button Operation

Operation should be secure and smooth. Aperture lever should securely move to the point as specified. For other items, the standard is the same as that of F2. For Adjustment, refer to p. S6.

3-20-5 Mechanical Shutter Release Operation

After film-advance operation, when the mechanical release knob is turned, both the reflex-mirror and the shutter should securely operate. When the mechanical release knob is returned, it should firmly click into place.

3-20-6 Lens-release Button Operation

Operation should be smooth. Release-pin should protrude 0.7 - 1.2mm above the bayonet surface.

3-20-7 Body Flange Back

Same as that of the FE. Refer to the Repair Manual of FE.

3-21 Lead Wire Soldering from Front Plate Assembly

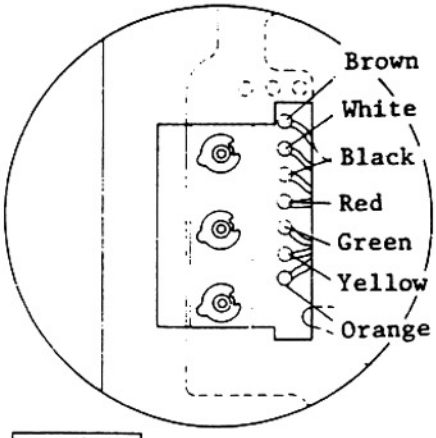

fig. 21-1

Tool: Soldering Iron

Points to be soldered

1) Lead wire B #1066, self-timer LED (Brown)
2) Lead wire A #1065, self-timer LED (White)
3) Lead wire, release magnet minus (Black)
4) Lead wire, release magnet plus (Red)
5) Lead wire #1083, memory switch (Green)
6) Lead wire A #1081, shutter switch (Yellow)
7) Lead wire B #1082, shutter switch (Orange) (fig. 22-1)
8) Lead wire #1077, X contact (Gray) (fig. 22-2)
9) Lead wire #1080, AF contact (Orange)

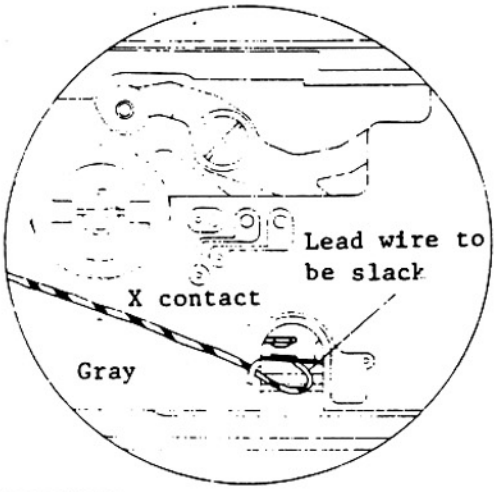

fig. 21-2 Lead wire X contact

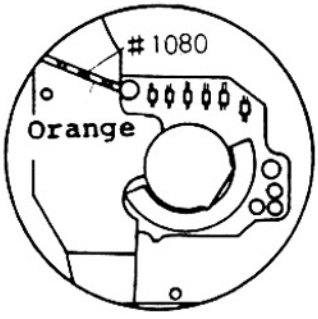

fig. 21-3

3-22 Unit, rewind shaft

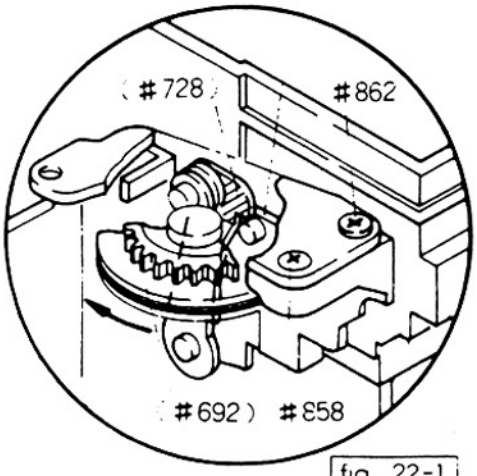

fig. 22-1

Maximum aperture compensation system is the same as that of Nikon FE and FM. The resistance value of FRE remains unchanged between F/1.4 and maximum aperture compensating position (F/1.6). The value changes immediately when the aperture ring is rotated from F/1.6 toward the minimum aperture.

Tool required: J18065

Body 1) Mount Tool Lens J18065 onto the camera body and set the aperture ring to F/1.6

2) Rotate Winding roller (#692) clockwise until it contacts stopper (a part of #55; see fig. 22-1.)

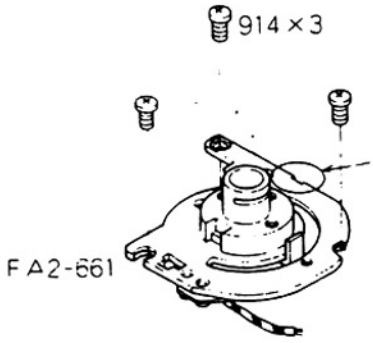

Unit FA2-661, Screw ⊕ #914 x 3
Check Brush gear #688 and Winding roller (#692) for proper engagement.
If improperly engaged, adjust by re-locating Unit base FA1-690.
Screw ⊕ #858, ⊕ #862 (fig.22-1)

Maximum F-No. Checking

1) Brush gear FA1-688 should securely starts rotating when the aperture ring is rotated from F/1.6 to F/2.
Malfunction may result if FA2-661 is improperly positioned. Adjustment is possible by re-locating FA2-661.

2) Brush gear should securely come in contact with Stopper (#666) when the aperture ring is reversed from F/2 to F/1.6. (fig. 22-2)
Adjustment can be made by bending Stopper. (fig. 22-3)

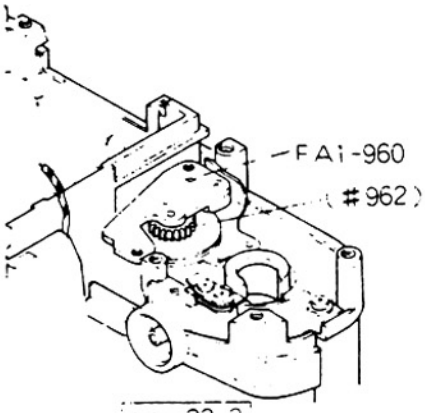

fig. 22-2

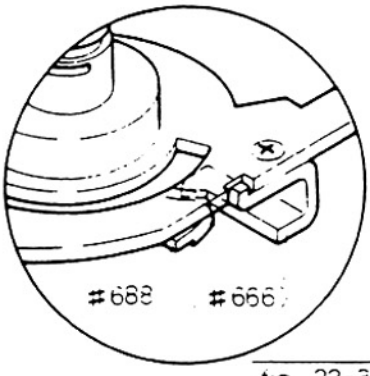

fig. 22-3

3-23 Display Block, exposure information

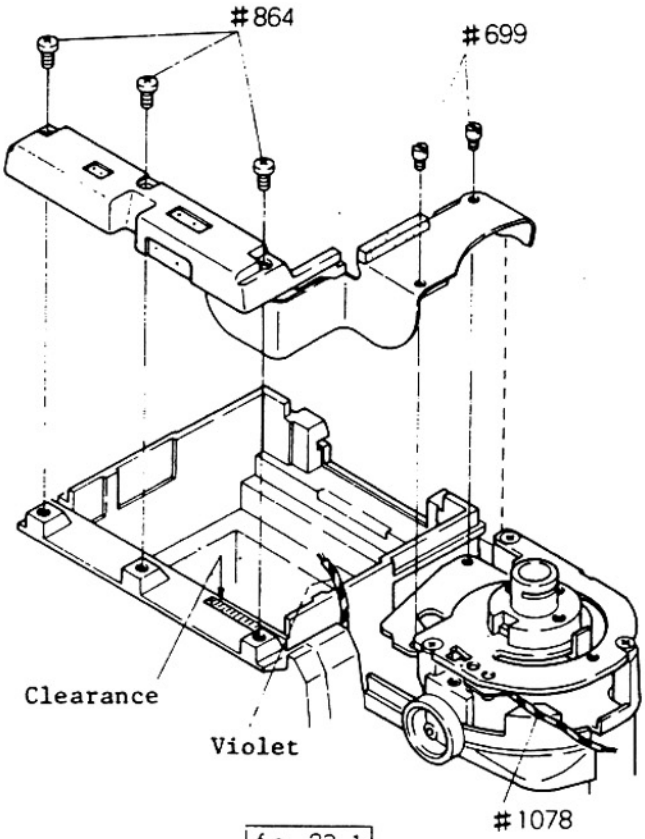

fig. 23-1

Camera body

↓

Locate Lead wire B #1076 (Violet) as depicted in fig. 24-1.

Display block, FA1-132

Insert FPC between Front plate and Body die-casting as per fig. 23-1.

↓

Screw ⊕ #864 x 3

↓

Screw ⊖ #699 x 2

↓

Soldering

1. Lead wire #1078, FRE brush (Brown)
2. Lead wire B #1076, synch signal (Violet)

(See fig. 23-2.)

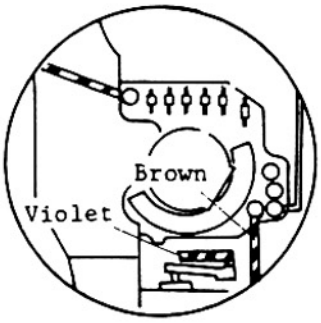

fig. 23-2

3-24 Electrical System Operation Check

After completing FPC, LCD installation, install new batteries to check the following electrical operation.

3-24-1 Power Switch(Meter ON/OFF switch)

When the shutter-release button is depressed slightly, liquid crystal display should appear. Display should disappear in approx. 16 sec. after the finger is lifted off the button.

3-24-2 Shutter-release

When the shutter-release button is depressed further down, the shutter should be securely released.

3-24-3 Self-timer

With the protrusion of Disk #211 set to the self-timer setting, when the release button is depressed, self-timer LED should go on and off at a 2 HZ rate for first 8 seconds, then it should also go on and off at a 8 HZ rate for 2 seconds before the shutter is released.

3-24-4 Shutter-speed Change-over

With the shutter-speed dial set to "Auto", when the light-intensity into the camera body is changed, the shutter speed should also change.

Shutter speed should vary with manual shutter-speed setting.

Note: Before checking, if the counter switch remains ON, advance the frame counter more than 3 frames.

3-24-5 Liquid crystal Display(LCD)

When the shutter-speed dial is set to manual shutter speed setting ranged from 1/2000 to 8 sec., correct liquid crystal display in accordance with the setting should appear. (e.g. M2000 - M8")

With the shutter-speed dial set to "Auto", when the aperture ring is rotated or the camera's lens-mounting ring is covered by the hand, liquid crystal display should change.

When the shutter-speed dial is set to "B" and "T", the following display should appear respectively.

B : M" T : M"

3-25 Top Cover, rewind side

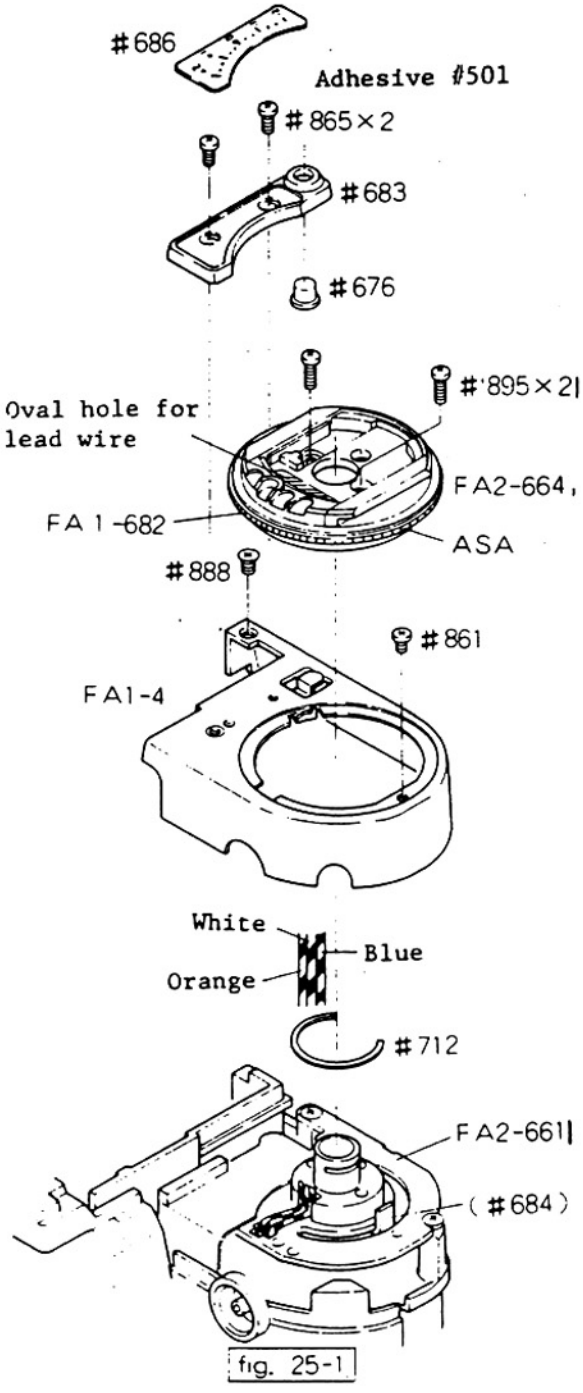

fig. 25-1

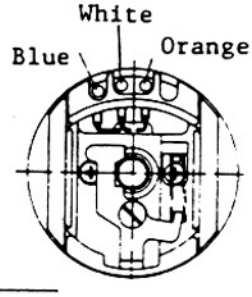

fig. 25-2 Lead Wire Soldering

Camera body

↓

Top cover, rewind side FA1-4
Screw ⊕ #888, ⊕ #861

↓

Lead wire fixing with #712

1) Lead wire #1073 (Blue)
2) Lead wire #1074 (White)
3) Lead wire A #1075 (Orange)
Position three lead wires as depicted in fig. 25-1 and fix to Unit FA2-661 with Spring #712.

↓

Shoe FA2-664

1) Pass the above three lead wires through the oval hole.
2) At installation, engage the protrusion of FRE holder (#684) with the slot of ASA dial.

↓

Screw ⊕ #895 x 2

1) Lift ASA dial ring and rotate it to check that the ring rotates smoothly and that it locks into place with a click.
2) Also check that ASA film speed can be set at both rotation limits (ASA12 & ASA6400)

↓

Lock button #676
Holder #683, Screw ⊕ #865 x 2

1) Temporarily install Exposure compensation scale #686 and rotate Exposure compensation knob FA1-682 to both limits (+2 and -2 directions) to check that the scale is equally located.
2) Check Lock button #676 for smooth operation.
3) Adjustment is possible by relocating #683.

↓

Exposure compensation scale #686
Apply pliobond.

↓

Solder three lead wires referring to fig. 25-2.

3-26 Counter Switch Adjustment Procedures

Tool required: Tool camera back J15187

Attach Tool J15187 or camera back to the camera body and stroke the film-advance lever to operate the frame counter for ON/OFF timing check of the counter switch.

frame / counter switch / Mode		S → 0	0 → 1
		ON	OFF
Auto		80	Set shutter speed
M	2000 - 125	M80	2000 - 8⁻
	60 - 8s	M60 - 8⁻	

For adjustment, loosen screw (⊕ #885) and re-locate Unit FA2-381.

Note: Screw #885 ... left-handed

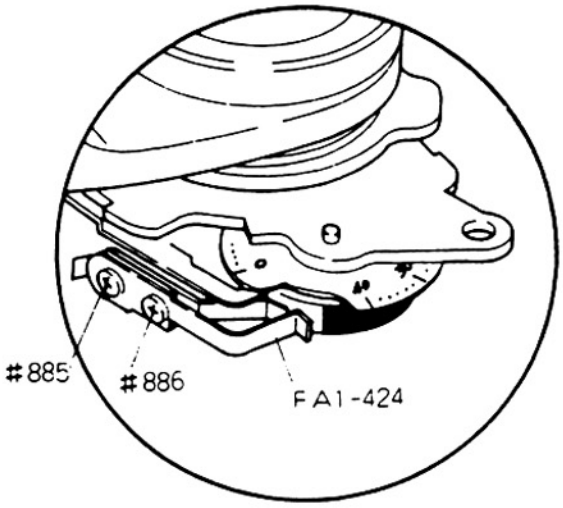

3-27 Shutter & Meter Accuracy Adjustments

Mark	Name	Meaning
	Terminal	Name of check/adjustment procedures
	Input	Preparation Check Measurement
	Judgement	To see if the value conforms to the standard
	Treatment	Adjustment procedures
△	Connector	To be connected to "◎"
◎	Connectee	To be connected from "△"
↓	Arrow	Work sequence

for EV6
EV9
EV15
see next section

3-27-1 Checking Sequence

START

1. Battery checker voltage adjustment
2. Manual shutter speed of 1/2000 sec. check/adjustment
3. Delay-time adjustment
4. Automatic shutter speed control adjustment
5. FRE adjustment
6. Automatic shutter speed control shift adjustment
7. Automatic shutter speed display ∞ adjustment
8. Automatic shutter speed display shift adjustment
9. Manual shutter speed display adjustment ∞
10. Manual shutter speed display shift adjustment
11. Speedlight level adjustment
12. Ready-light operation check
13. Memory shutter speed check
14. Self-timer shutter speed check
15. Mechanical shutter speed check
16. X-contact time-lag adjustment
17. Shutter bounce adjustment
18. AF contact conductivity check
19. DATA contact conductivity check

END

Note: Checking sequence through 1 to 11 should be strictly observed.

Tool required:

Digital multi-meter J9032, etc.		DC regulated power supply J9001-1, etc.	
Shutter tester J18022-1, J19033		Tool camera back	J15187
Tool lens	J18041-1	Dummy strobe	J18077
Driver	J15188	Standard reflector	J15196
Finder cover	J15191	DAS conductivity check tool J18078	

(1) When using shutter tester J18022-1, set the mode selector of shutter curtain travel to the horizontal direction.
(2) It is impossible to check the auto/manual shutter speeds of 1/1000 and 1/2000 with J18022-1, because the slit of J18022-1 is too broad.
(3) When checking, attach Tool camera back J15187 to the camera body and advance the frame counter more than 3 frames (Counter switch...OFF).
(4) Rotational direction of VR mentioned in this section indicates the direction viewed from the front side of the camera body (camera's lens-mount side).

3-27-2 Location of Variable Resistor for Adjustment

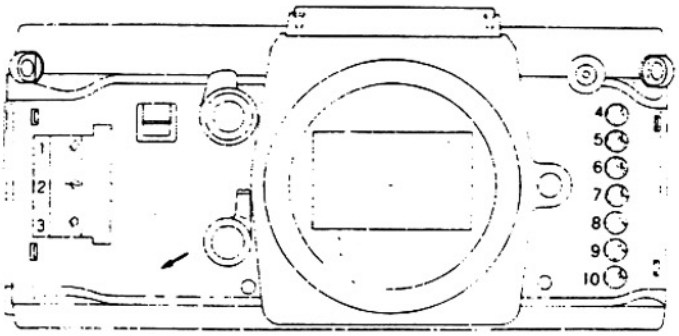

VR1: Automatic shutter speed control γ adjustment

VR2: Battery checker voltage adjustment

VR3: Speedlight level adjustment

VR4: Automatic shutter speed display γ adjustment

VR5: Automatic shutter speed display level adjustment

VR6: Manual shutter speed display shift adjustment

VR7: Automatic shutter speed control shift adjustment

VR8: FRE γ adjustment

VR9: Manual shutter speed display adjustment

VR10: Delay-time adjustment

3-27-3-1 Battery Checker Voltage Adjustment

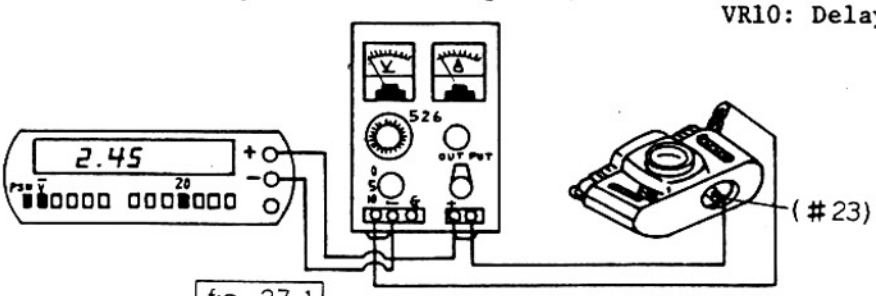

fig. 27-1

Connect Digital Voltmeter to DC regulated power supply and the camera body respectively as depicted in fig. 27-1.

3-27-3 Flow-chart

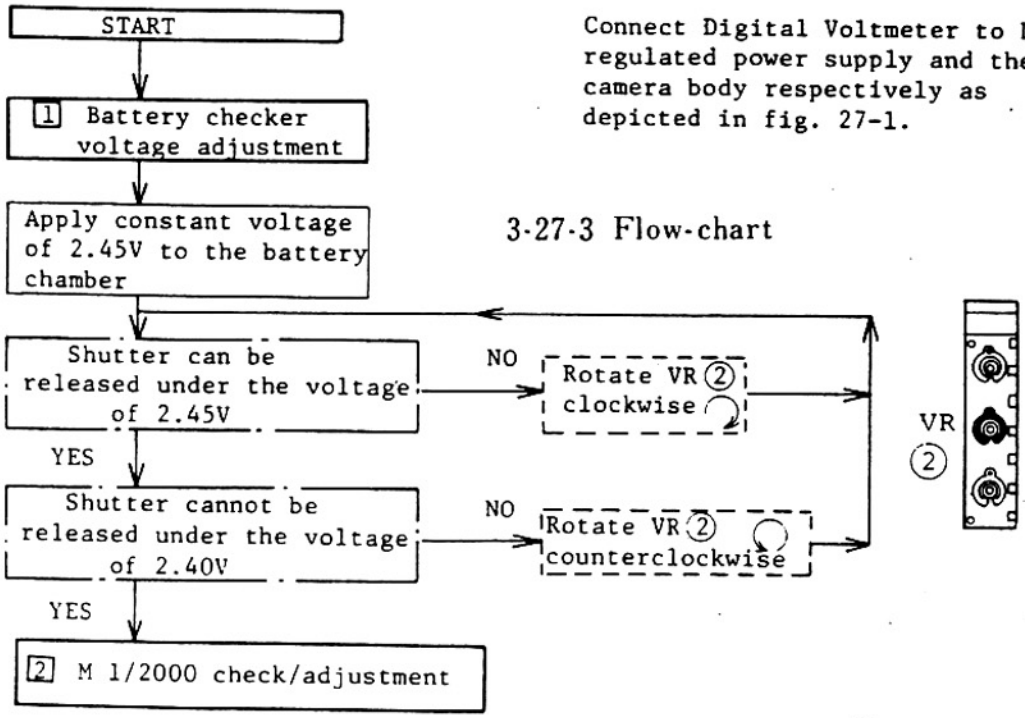

3-27-3-2 Manual Shutter Speed of 1/2000 sec. Check/Adjustment

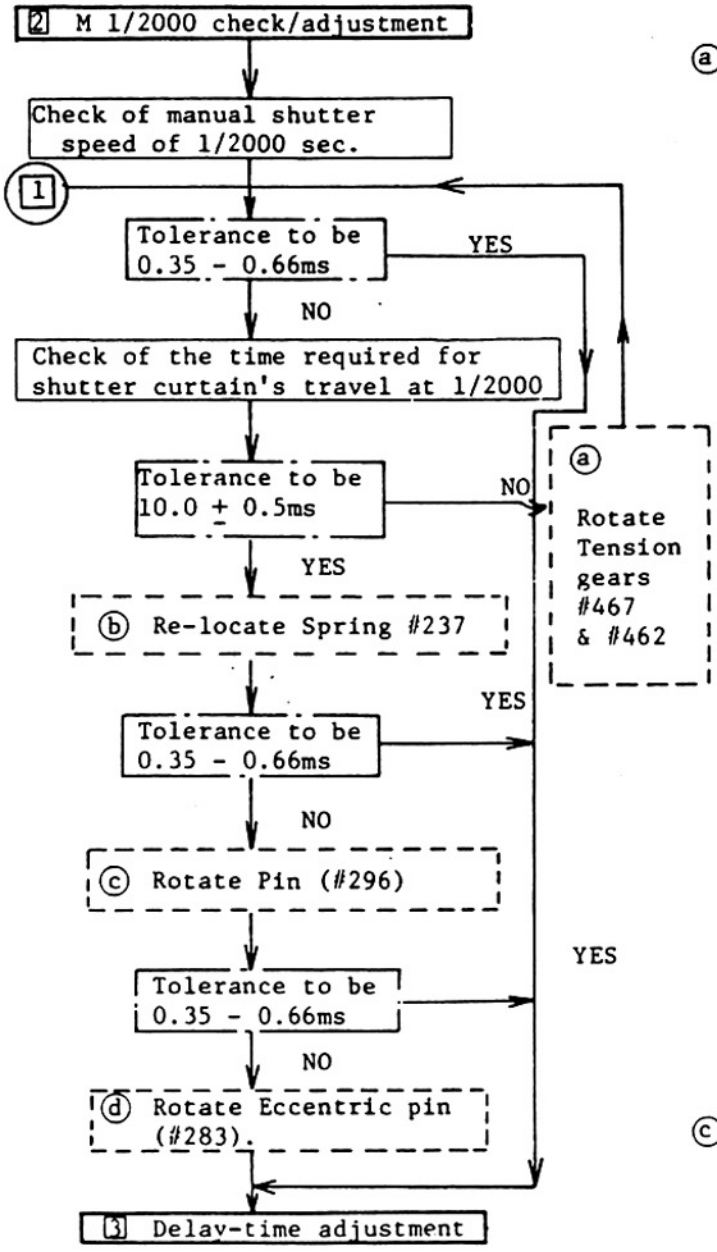

ⓐ To shorten shutter speed.

To lengthen shutter speed.

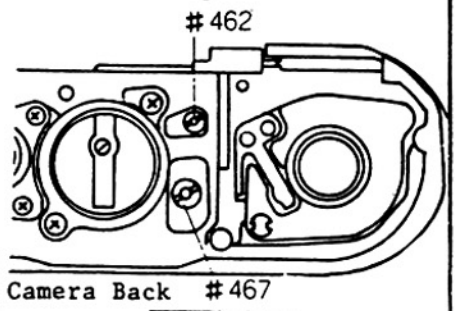

fig. 27-2

ⓑ Prior to adjustment, remore Unit base FA2-201. (SPEED CONTROL)

Spring engagement	Shutter speed
②→③	shortened (0.5→0.3ms)
②→①	lengthened (0.5→0.7ms)

Note: 2... Standard position

fig. 27-3

ⓒ Prior to adjustment, remove Unit FA2-381. (WIND HEAD) Clearance to be 0 - 0.2mm between Pin (#296) and Hook (#292) (For stable shutter speeds 1/500 & 1/1000)
After adjustment, apply adhesive #350.

ⓓ 1) Take out Front unit base and remove adhesive agent on Eccentric pin (#283).

2) Remove Unit FA2-201, (SPEED CONTROL) then you can easily make adjustment with set driver (#2) through the access hole on Unit FA2-231.

3) After adjustment, apply adhesive #616 onto Pin.

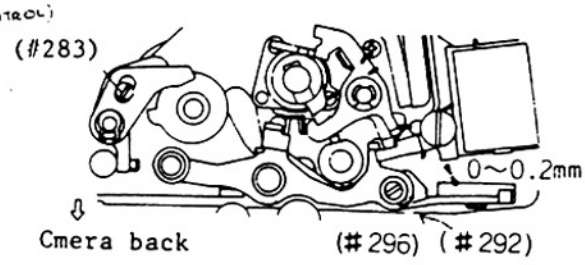

fig. 27-4

3-27-3-3 Delay-Time Adjustment

Delay-time is to adjust the period from trigger switch OFF-time to trigger-OFF signal transmitting time in order to harmonize the mechanical system with the electrical system.

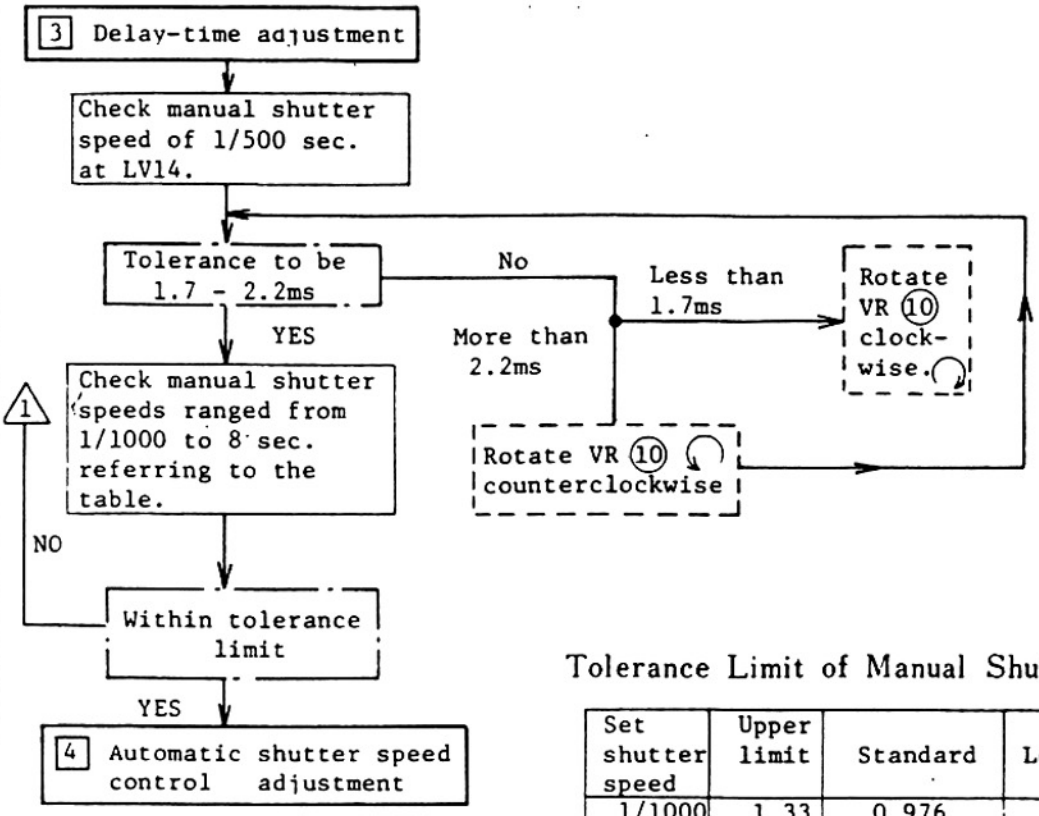

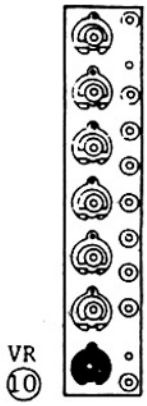

Tolerance Limit of Manual Shutter Speed

Set shutter speed	Upper limit	Standard	Lower limit
1/1000	1.33	0.976	0.71
1/500	2.66	1.95	1.43
1/250	5.34	3.91	2.86
1/125	9.62	7.81	6.34
1/60	19.2	15.6	12.7
1/30	38.4	31.2	25.3
1/15	76.9	62.5	50.8
1/8	153	125	102
1/4	308	250	203
1/2	616	500	406
1s	1231	1000	812
2s	2.46s	2000	1.62s
4s	4.92s	4000	3.25s
8s	9.85s	8000	6.50s

Note: Exposure balance between the middle of the frame and the both frame edges to be ± 0.2EV.

3-27-3-4 Automatic Shutter Speed Control γ Adjustment

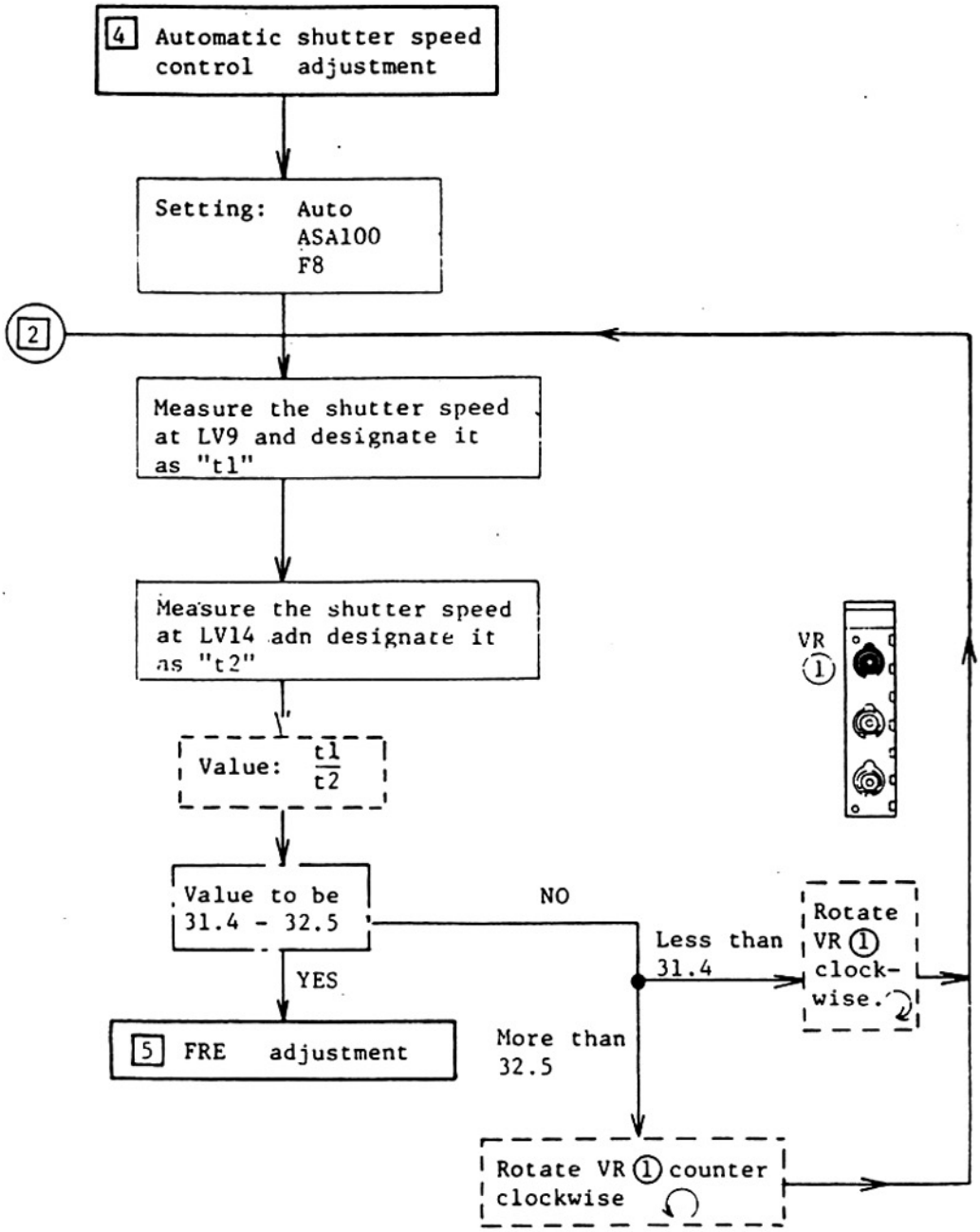

Note: 1) As for the shutter speeds of "t1" and "t2", measure 5 - 10 times, then take the aberage respectively.

2) Value t1/t2 has much effect on the automatic shutter speed display accuracy and thus it should strictly conform to the standard: 31.4 - 32.5.

3-27-3-5 FRE γ Adjustment

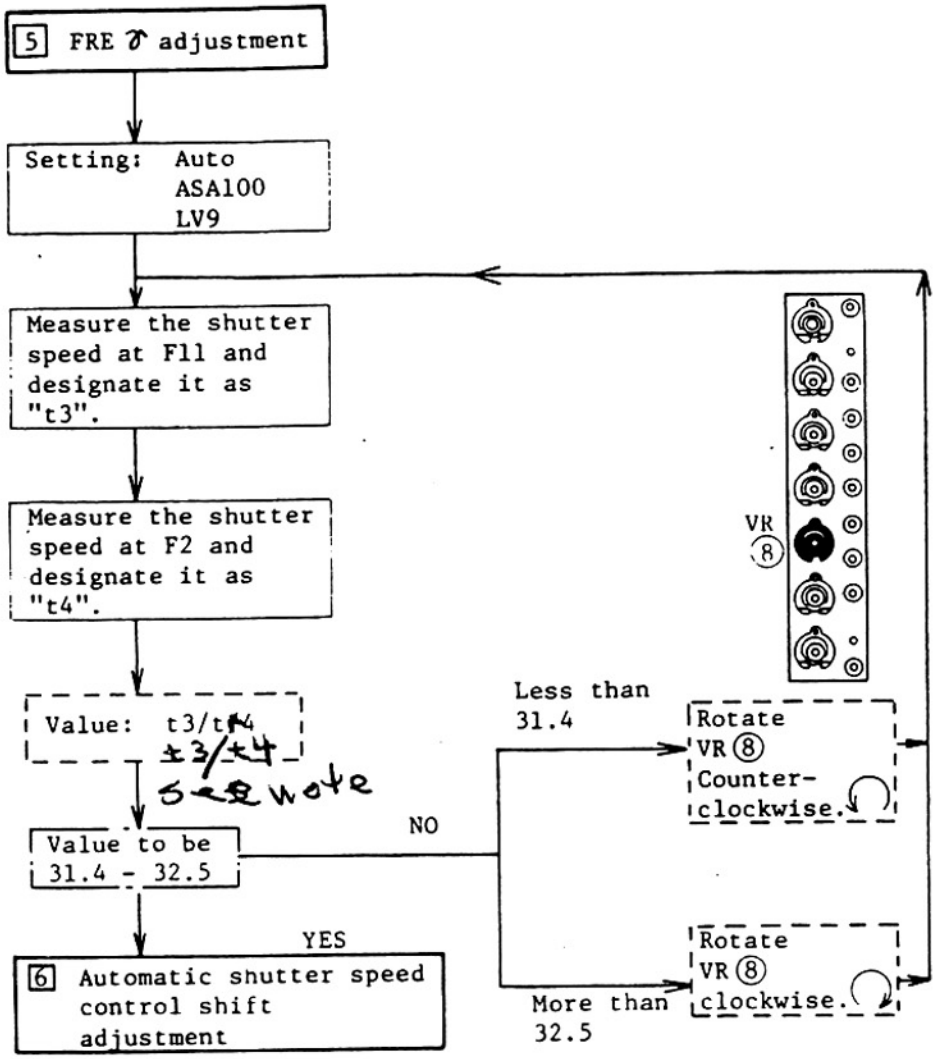

Note: Value t3/t4 has much effect on the automatic shutter speed display accuracy and thus it should strictly conform to the standard: 31.4 - 32.5.

also see note 2 on page A36 otherside

3-27-3-6 Automatic Shutter Speed Control Shift Adjustment

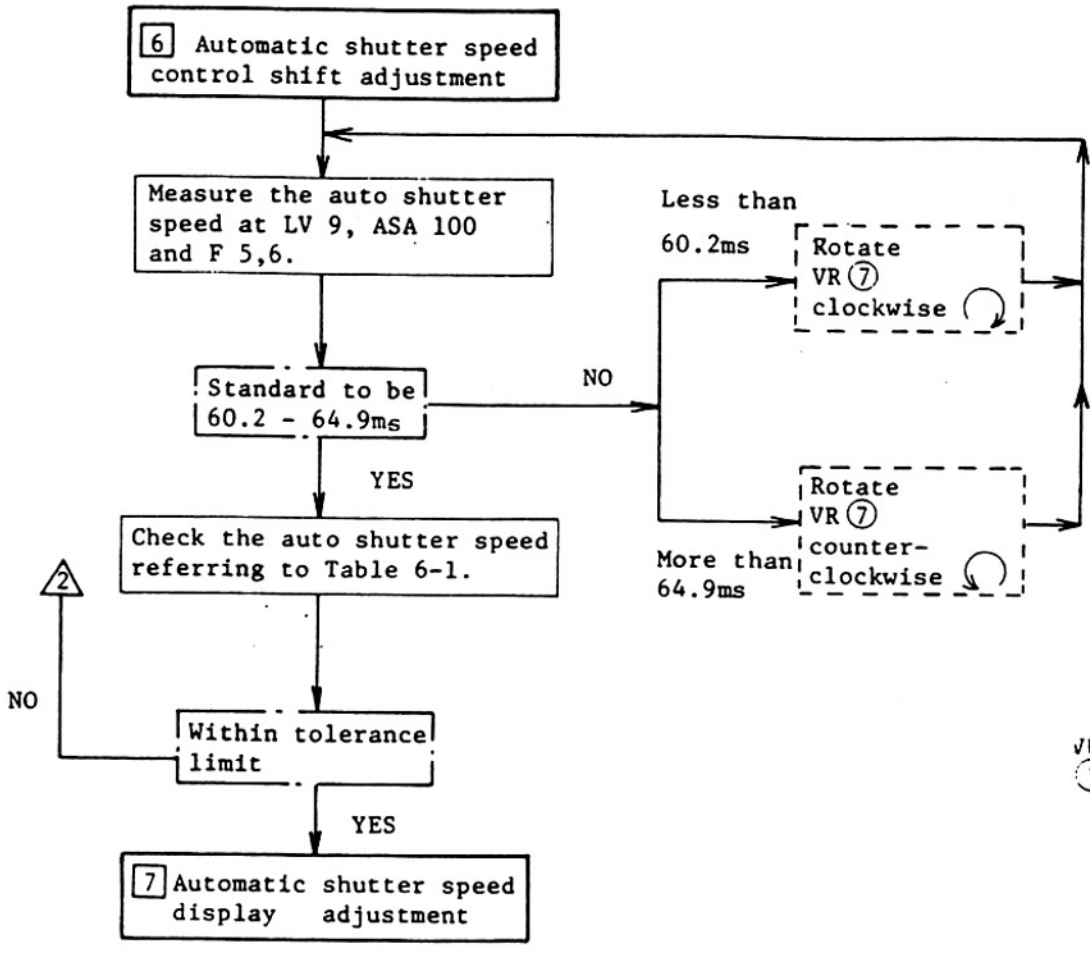

LV	ASA	F	Shutter speed	Tolerance limit (ms)
9	400	2	1/500	1.38-2.76
9	100	5.6	1/15	44.19-88.36
9	25	8	1/2	354-707
14	100	5.6	1/500	1.38-2.76
14	100	4	1/1000	0.62-1.54
4	100	2.8	1/2	354-707
4	100	4	1s	707 - 1414

Table 6-1 Auto Shutter Speed Accuracy

Note(1)When measuring 1/2000 sec., set the memory lock and use J19033.

(2)When determining "t3" and "t4", measure 5-10 times, then take the average respectively.

3-27-3-7 LCD Auto γ Adjustment

LCD means the grades of shutter speed display change in strict accordance with the change of light-intensity, ASA and F-stop (when one of these three factors is changed) e.g. when F-stop is changed from 2 to 11 (AV·5-step change), shutter speed display should change from "125" to "4" (TV·5-step change).

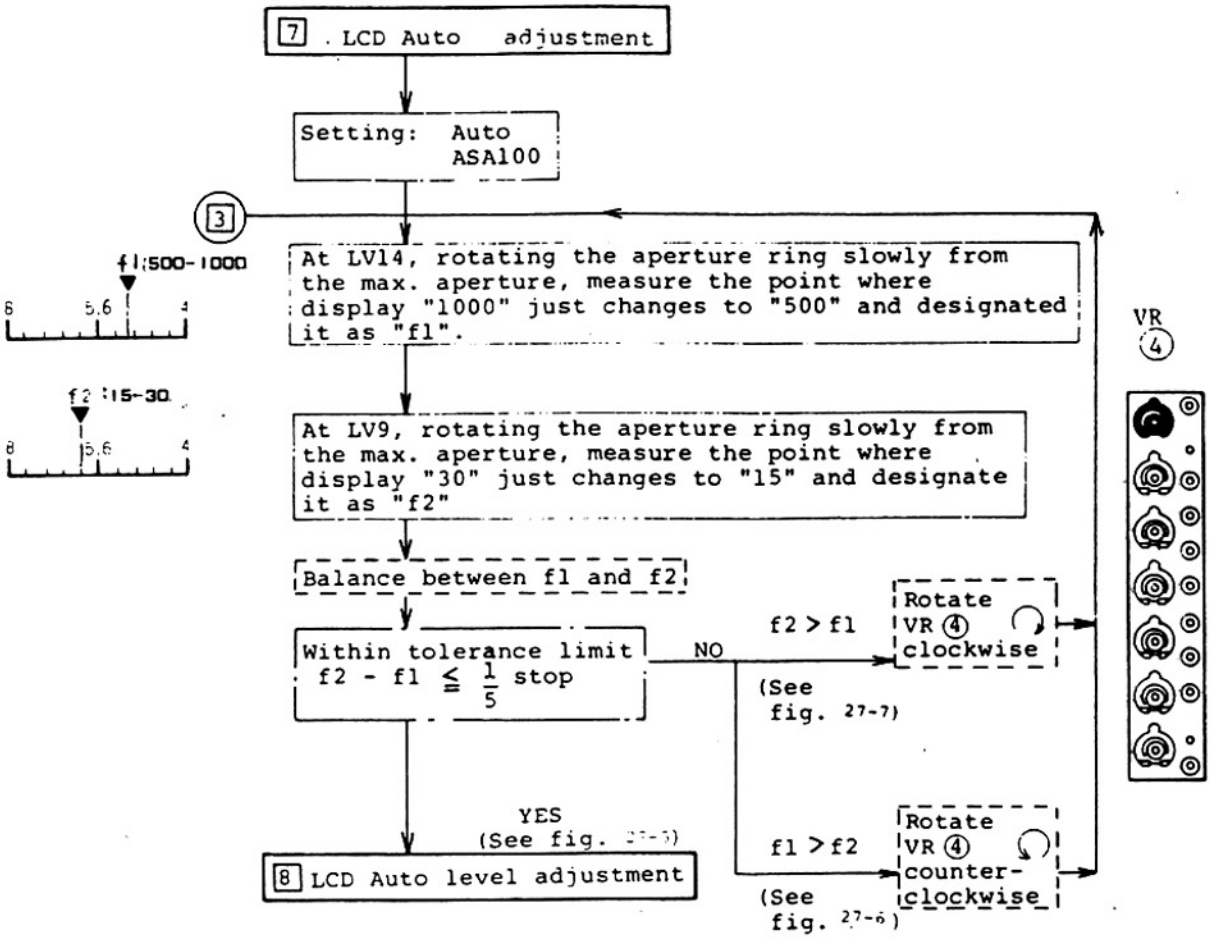

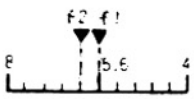

fig. 27-5

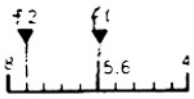

fig. 27-6

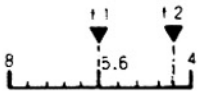

fig. 27-7

3-27-3-8 LCD Auto Level Adjustment

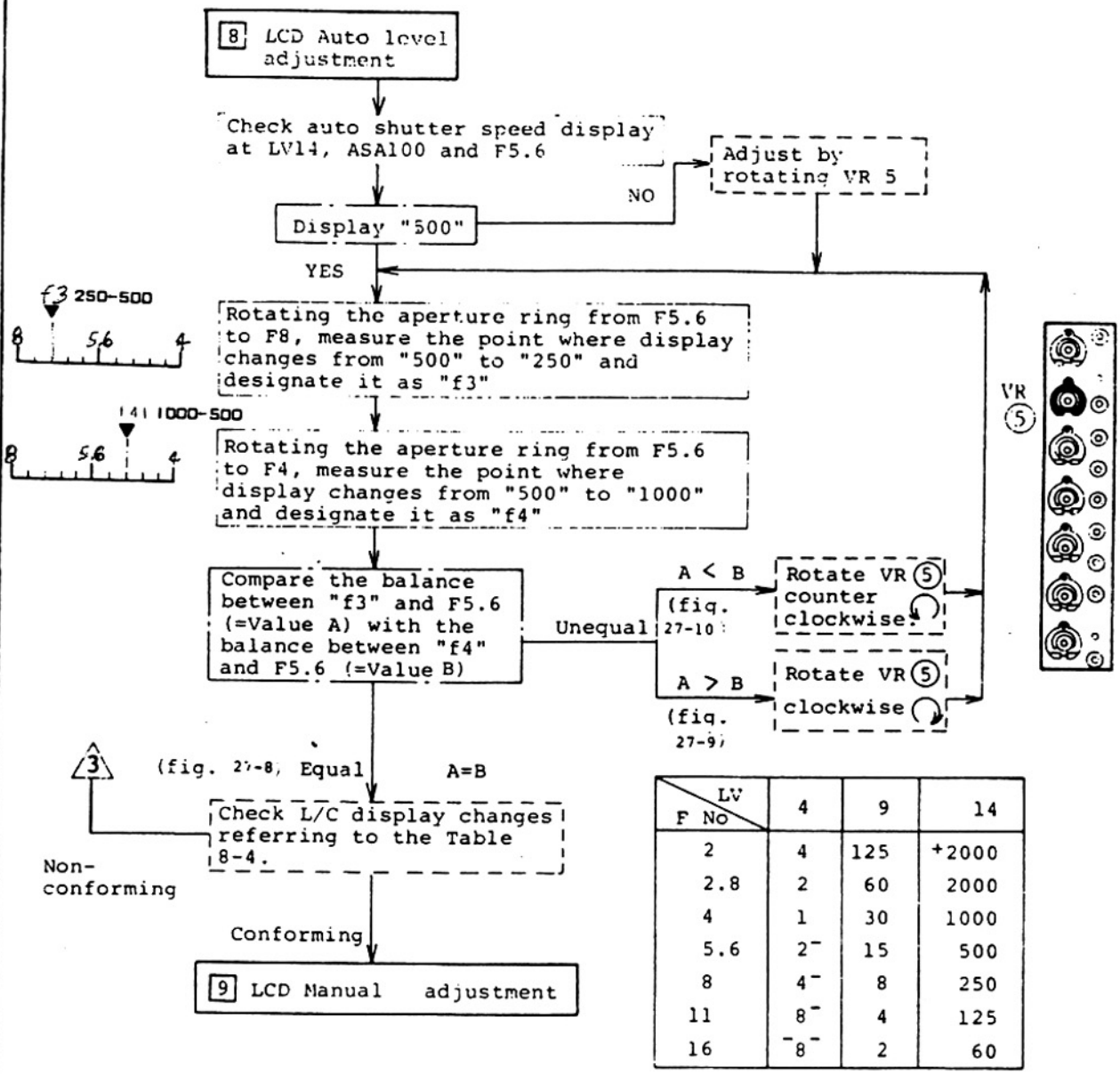

F NO \ LV	4	9	14
2	4	125	+2000
2.8	2	60	2000
4	1	30	1000
5.6	2⁻	15	500
8	4⁻	8	250
11	8⁻	4	125
16	⁻8⁻	2	60

Table 8-4 LCD Auto Accuracy (ASA100)

Note: Middle value of dead zone to be within ± 1/2EV as compared with standard display value.

Range of dead zone: 2/3 - 4/3EV

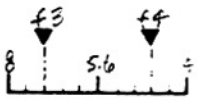

fig. 27-8

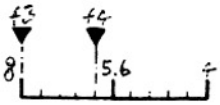

fig. 27-9

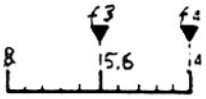

fig. 27-10

3-27-3-9 LCD Manual γ Adjustment

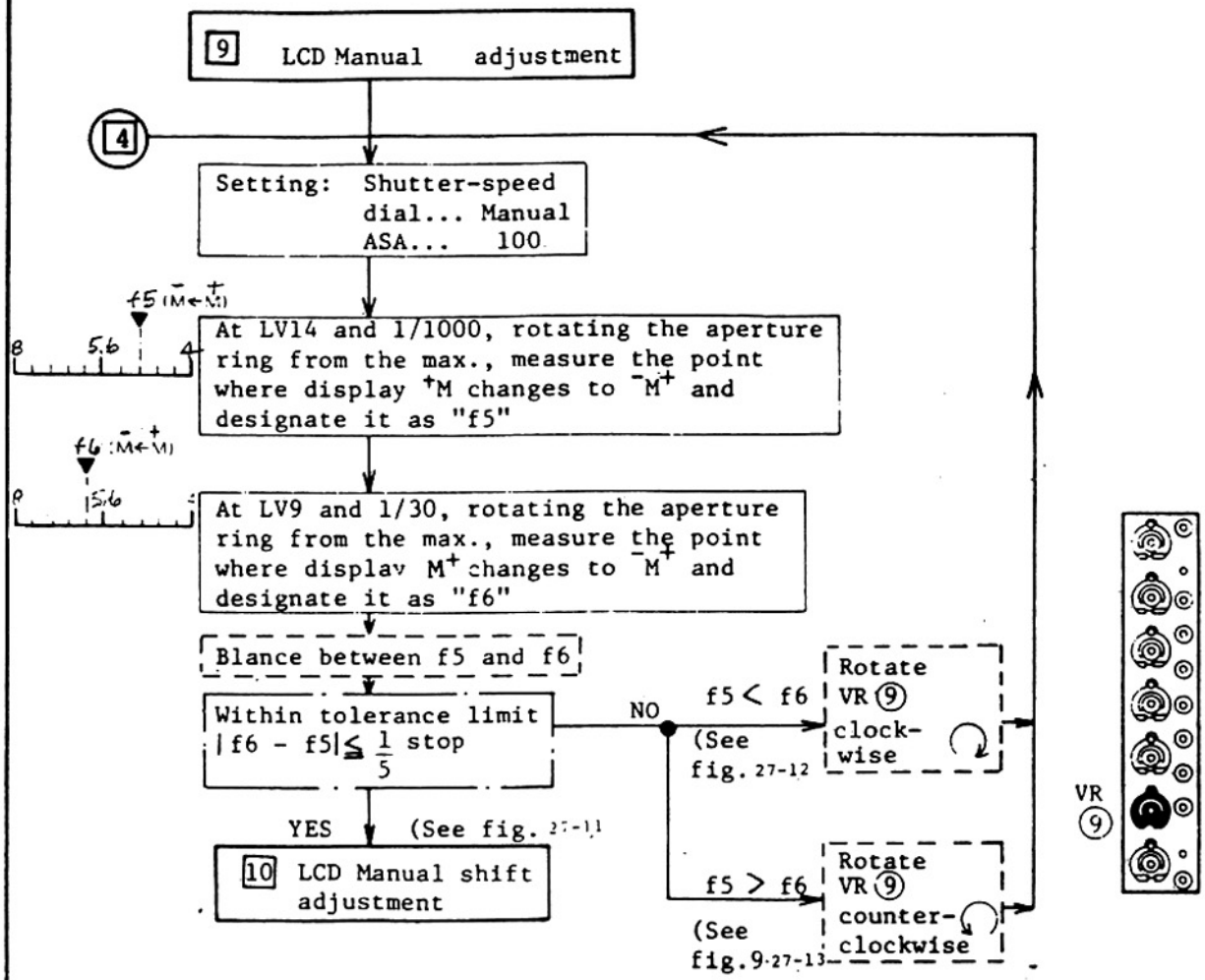

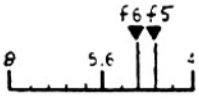

fig. 27-11

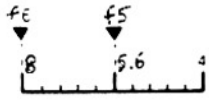

fig. 27-12

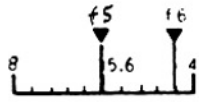

fig. 27-13

3-27-3-10 LCD Manual Shift Adjustment

10 LCD Manual shift adjustment

Setting LV14, ASA100, M1/500 and F5.6, check the display

Display "$^{-}M^{+}$" — NO → Adjust by rotating VR ⑥

YES

Rotating the aperture ring from F5.6 to F8, measure the point where display changes from "$^{-}M^{+}$" to "^{-}M" and designate it as "f7".

Rotating the aperture ring from F5.6 to F4, measure the point where display changes from "$^{-}M^{+}$" to "M^{+}" and designate it as "f8".

Compare the balance between "f7" and F5.6 (=Value C) with the balance between "f8" and F5.6 (=Value D)

C < D (fig. 27-15) → Rotate VR ⑥ clockwise

Unequal

C > D (fig. 27-16) → Rotate VR ⑥ counter-clockwise

Equal (C=D) (fig. 27-14)

Check L/C display change referring to the Table 10-4

Non-conforming → 4

Conforming → 11 Speedlight level adjustment

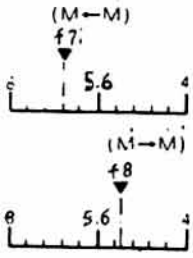

LCD Manual Accuracy (ASA100)

LV	T	F	Correct display
14	1/2000	2.8	$^{-}M^{+}$
	1/60	16	
9	1/125	2	
	1/2	16	
4	2s	5.6	

Note: Middle display accuracy of dead zone to be within ± 1/5EV at every measuring point

Range of dead zone: 0.5 ± 0.2EV

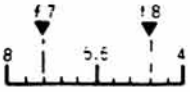

fig. 27-14

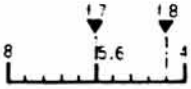

fig. 27-15

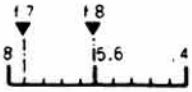

fig. 27-16

3-27-3-11 Speedlight Level Adjustment

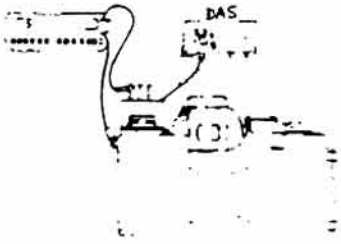

Speedlight level is to conform the amount of camera's signal to be transmitted into the exclusively designed speedlight to the standard value. Camera's signal: the subject light-intensity reflected by the film plane is electrically converted into the signal in the camera body and transmitted to the speedlight mounted onto the camera immediately after the shutter is released for auto-flash picture-taking.

1) Connect DAS conductivity check tool J18078, Dummy Strobe J18077 and Digital multimeter J9003 as shown in fig. 11-1 and mount J18077 on the shoe mount.

2) Place Standard reflector J15196 to the aperture of the camera.

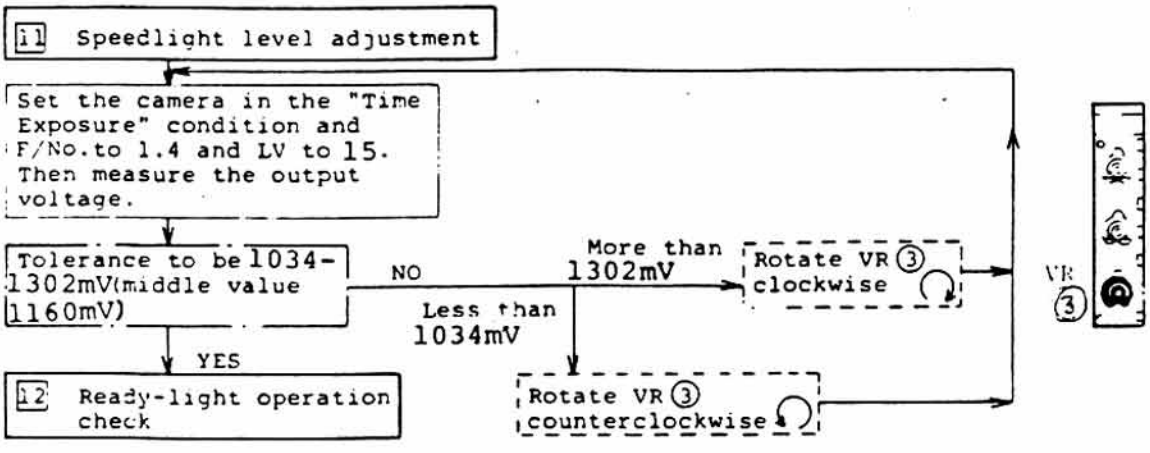

3-27-3-12 Ready-light Operation Check

1) Connect READY terminal and GROUND terminal of J18078 to the READY terminal of J18077 and camera body respectively.

2) Check the operation at LV9 referring to the table below.

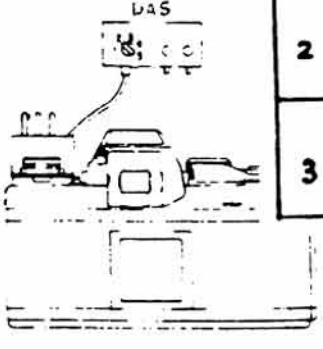

DAS DIAL \ T DIAL	L/C display. Shutter speed			Ready-light LED
	AUTO	1/2000 ~1/125	1/60 ~ 8sec	
1 (OFF)	2000-8 Set Shutter Speed	2000-125 Set Shutter Speed	60-8 Set Shutter Speed	OFF
2 (READY 1)	80 1/70sec	80 1/70sec	60 8 Set Shutter Speed	ON
3 (READY 2)	80 1/70sec	80 1/70sec	60 8 Set Shutter Speed	OFF

3-27-3-13 Memory Shutter Speed Check

1) Measure the automatic shutter speed under the condition of LV9, ASA 100 and F11.

2) Depressing the memory lock button, change LV only from 9 to 15 and measure the shutter speed.

Standard: both shutter speeds to be 210 - 298 ms (middle value- . .250ms)

3-27-3-14 Self-timer Shutter Speed Check

Measure the automatic shutter speed under the condition of LV9, ASA 100 and F11 when releasing the shutter via self-timer.

Standard to be 210 - 298ms (middle value. . .250ms)

3-27-3-15 Mechanical Shutter Speed Check

Method: Remove battery or set the shutter-speed dial to 1/2000 - 1/60 sec, and check the mechanical shutter speed.

Standard : 1/55 sec. , 13.5 - 26.9ms (middle value. . .17.5ms)

Note: At the settings ranged from 1/30 to 8 sec., the shutter speed should be set speed.

3-27-3-16 X-contactTime-lag Adjustment

Method: Set the shutter-speed dial to "X" and check time-lag.

Standard: 0.41 - 1.2ms

Adjustment: Adjust clearance between X contact A FA1 - 516 and X contact B FA1-517.

3-27-3-17 Shutter Bounce Adjustment

Adjustment is possible by rotating Pin (#513 x 2).
After adjustment, re-check X-contact time-lag.

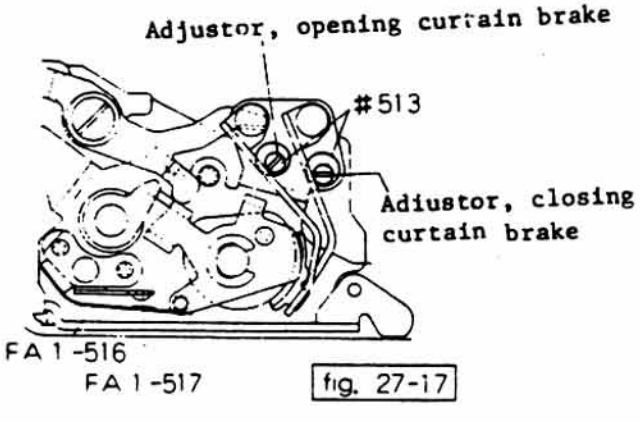

fig. 27-17

3-27-3-18 AF Contact Conductivity Check

1) Connect AF terminal and Ground terminal of DAS conductivity check tool J18078 to the cameras AF contact and the camera body respectively.

2) Check LED 1 for ON/OFF condition.

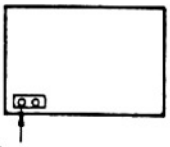

AF contact

Operational condition	LED 2
Shutter-release button is half-depressed.	ON
Shutter is released.	OFF
Finger is lifted off the button.	ON for 16 sec.

Note: It is also possible to check with the Oscilloscope.

3-27-3-19 DATA Contact Conductivity Check

1) Check DATA contact terminal and Ground terminal of DAS conductivity check tool and to the camera's DATA contact and the camera body resepectively.

2) Check LED 2 for ON/OFF condition.

   LED 1 should momentarily light up when the shutter is released.

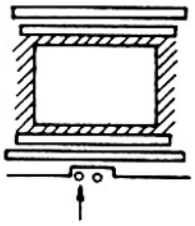

DATA contact

3-28 Top Cover, rewind side

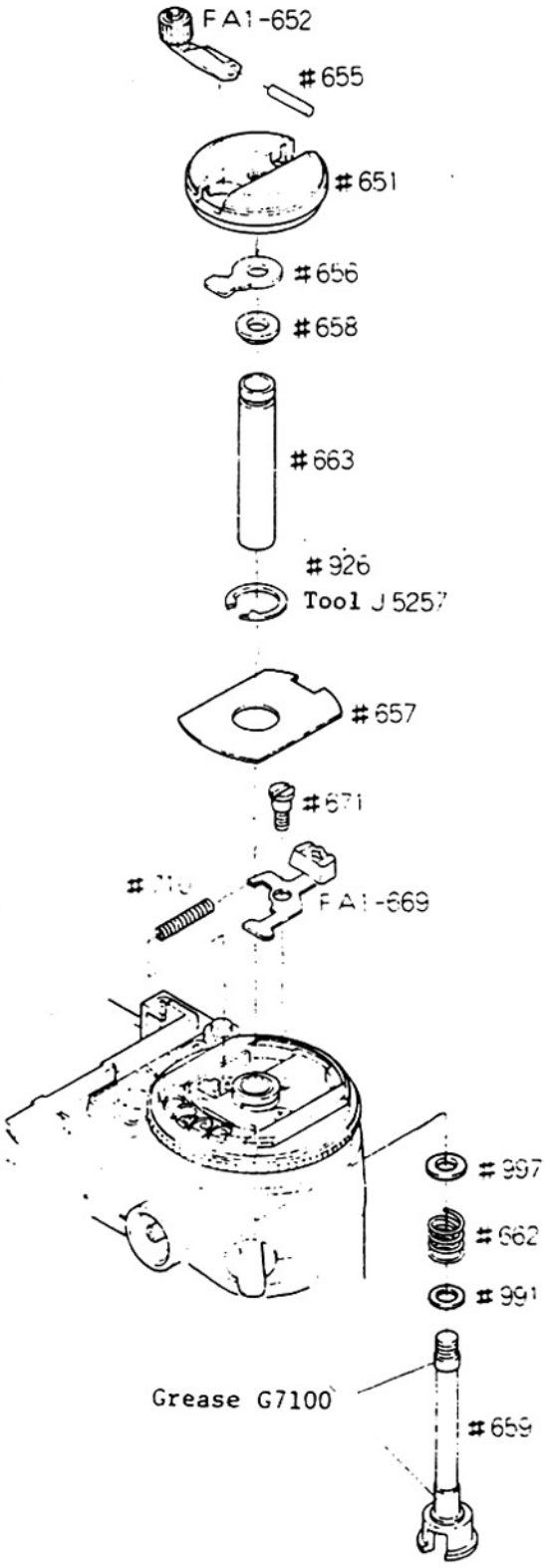

Camera body
↓
Spring #710
Tab FA1-669
↓
Screw #671

After installation, check #710 and FA1-669 for proper operation.

↓
Cover #657
Snap ring #926
↓
Tube #663
↓
Washer #997
Friction spring #662
Washer #991
Rewind shaft #659
↓
Washer #658
Spring #656
↓
Rewind knob #651
Rewind crank FA1-652
Rod #655

Check Points

1) Rewind knob should securely click into place.

2) Rewind knob should rotate smoothly.

3) Camera back should securely open when Rewind knob is lifted.

3-29 Top Cover, Wind side

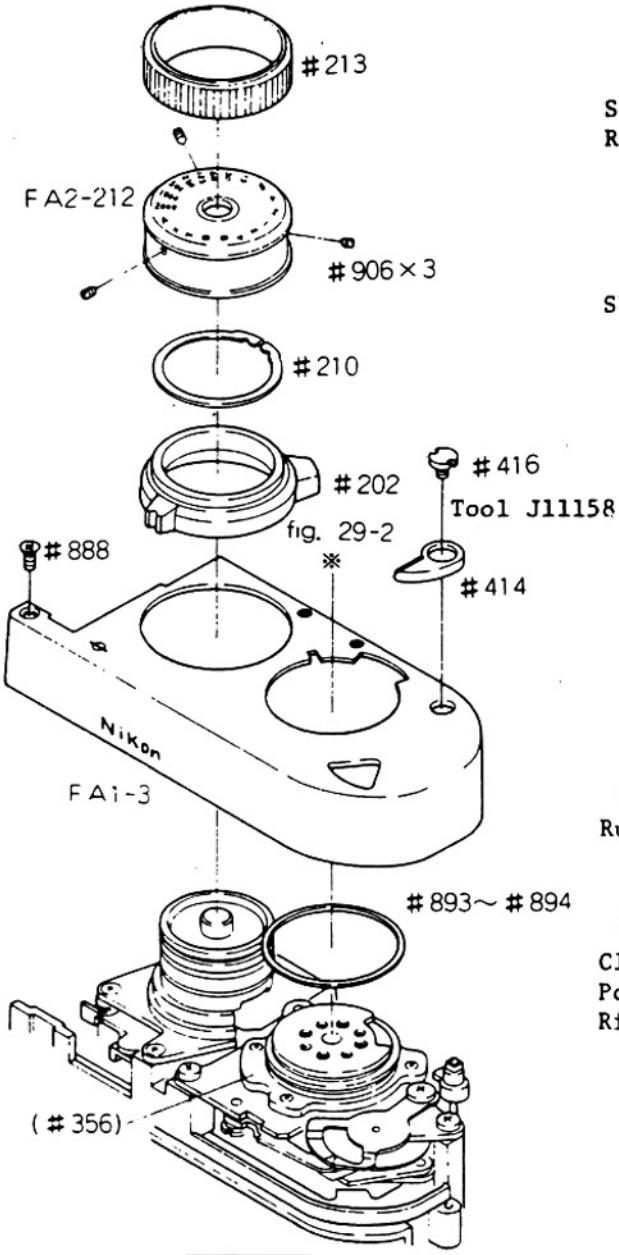

fig. 29-1

Camera body

↓

Top cover, wind side FA1-3,
Screw ⊕ #888

If clearance between FA1-3 and #356 can be detected, rectify by adding Washers:
#893; t = 0.05
#894; t = 0.1

↓

Self-timer lever #202
Retaining ring #210

Check that Lever #202 rotates smoothly and that it clicks into place.

↓

Shutter-speed selector FA1-212

Check Points

1) The dial should securely click into every setting when it is rotated slowly.
2) When the viewfinder is mounted, more than half breadth of the index on the viewfinder should align with the figures on the dial at every click-stop setting.
3) At both "A" and "X" settings, the dial should lock into place. When the auto-lock button is depressed, locking should be released.

↓

Rubber ring #213

Before installation, apply pliobond to a few portions inside the ring.

↓

Click spring #350
Power lock lever #341
Ring #353

Tool: J11156

Check that Lever #341 rotates smoothly and that it clicks into place.

↓

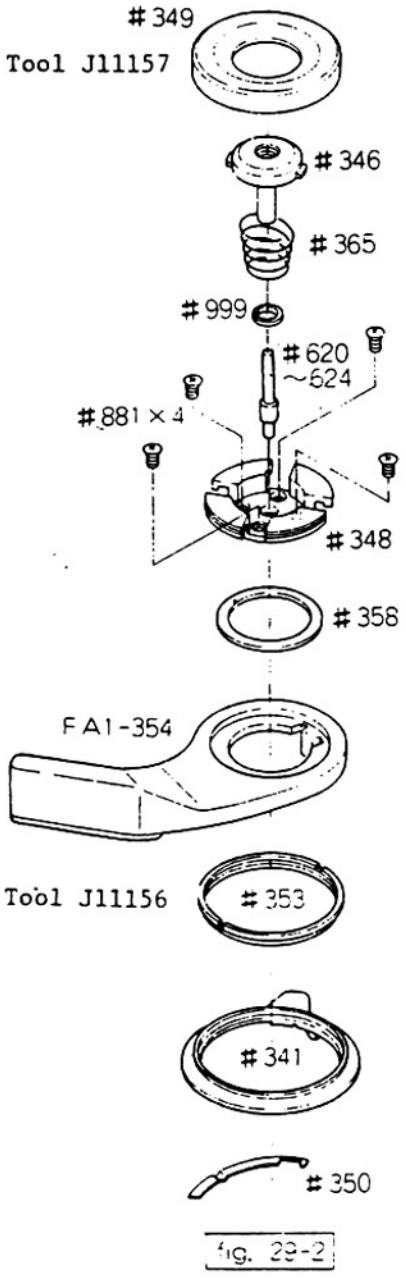

fig. 29-2

Film-advance lever FA1-354
Washer #358
Stopper #348, Screw ⊕ #881 x 4

When installing, align the center of #348 with that of Take-up shaft FA1-342 for smooth release button's movement.

Release button shaft #346, Spring #365
Washer #999 (for adjusting play of stroke p. A17)
Cover ring #349

Tool: Rubber pad J11157

Check Points

1) When Power lock lever is set to ON-position (red dot appears) and the release button is depressed slightly, liquid crystal display should appear and when the release button is depressed further down, the shutter should be released.

2) When Power lock lever is set back to OFF-position, and the release button is depressed slightly, L/C display should appear.

3) After film-advance operation, when the film-advance lever is being returned slowly with finger-pressure applied, the lever should move back and be flush with the camera body securely.

4) Release-button should be depressed smoothly.

Multi-exposure lever #414
Screw #416 (fig. 29-1)

Tool: J11158

1) Lever #414 should be set smoothly. Neither the spool nor the sprocket should rotate during film-advance operation.

2) At multi-exposure operation, Cam #591 should not be disengaged.

3) After the lever is set to multi-exposure position, when the lever is pushed back with the finger, multi-exposure operation should be cancelled.

注 半田付けを行う際は手袋使用のこと
ハンダコテはアースのとれているものを使用のこと。

Note When soldering, use goves. Soldering iron should be erathed.

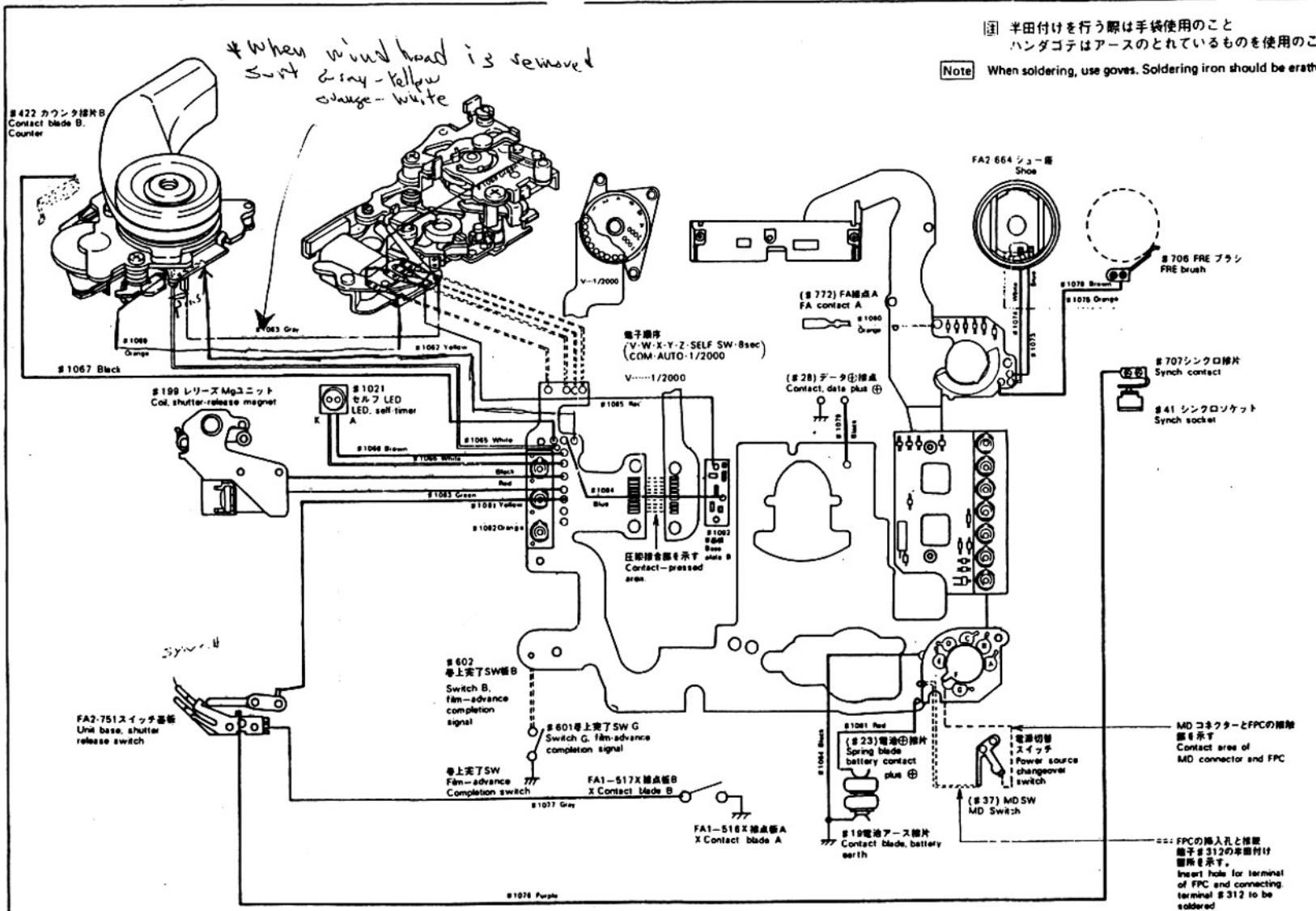

A47
F3

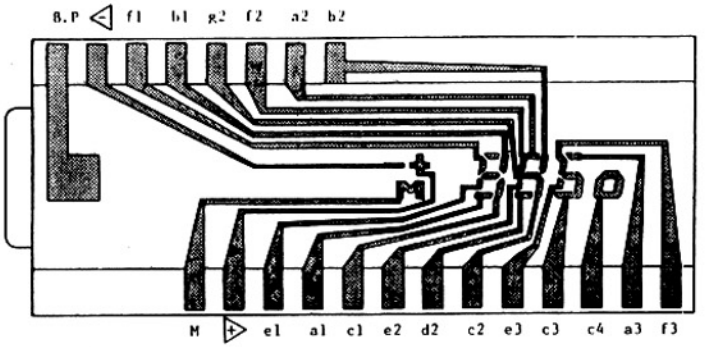

表示セグメント端子図
LCD Segments

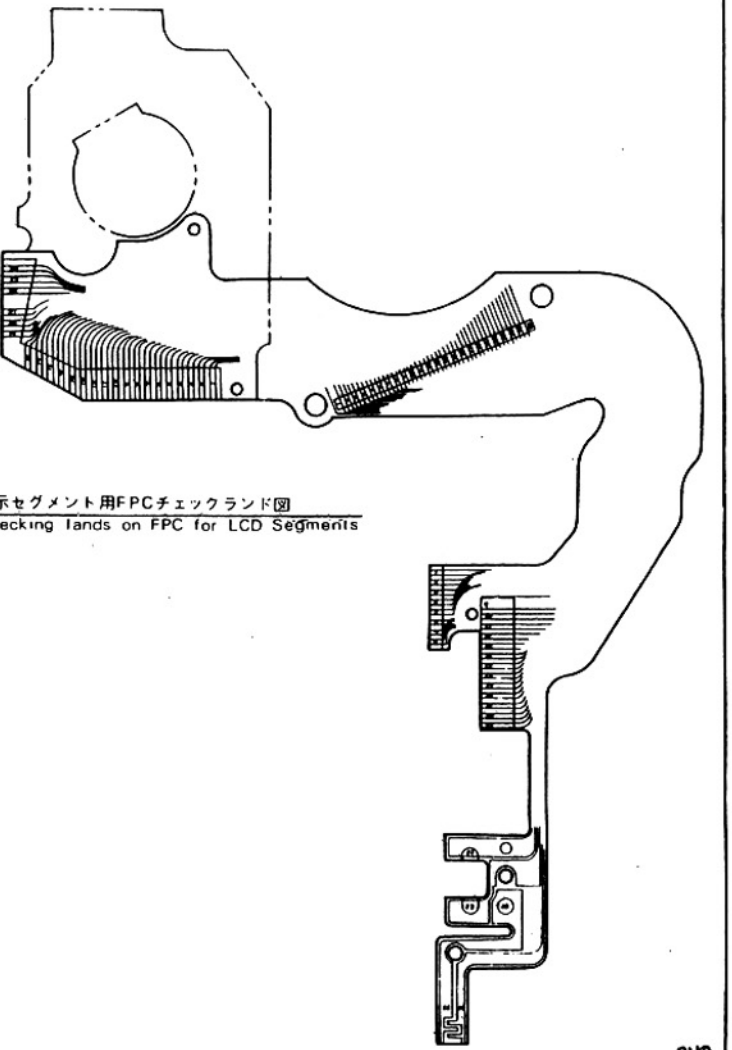

表示セグメント用FPCチェックランド図
Checking lands on FPC for LCD Segments

セグメント端子及びチェックランド表
Cross reference table

チェックランドNo. No.	端子 Checking lands	チェックランドNo. No.	端子 Checking lands
1	B.P	14	e2
2	−	15	d2
3	f1	16	c2
4	b1	17	e3
5	g2	18	c3
6	f2	19	c4
7	a2	20	a3
8	b2	21	f3
9	M	22	GND
10	+	23	レディLED Ready LED
11	e1	24	Vcc2
12	a1	25	
13	c1		イルミネーター Illuminator

A48
F3

A48
F3

1001 Checking lands

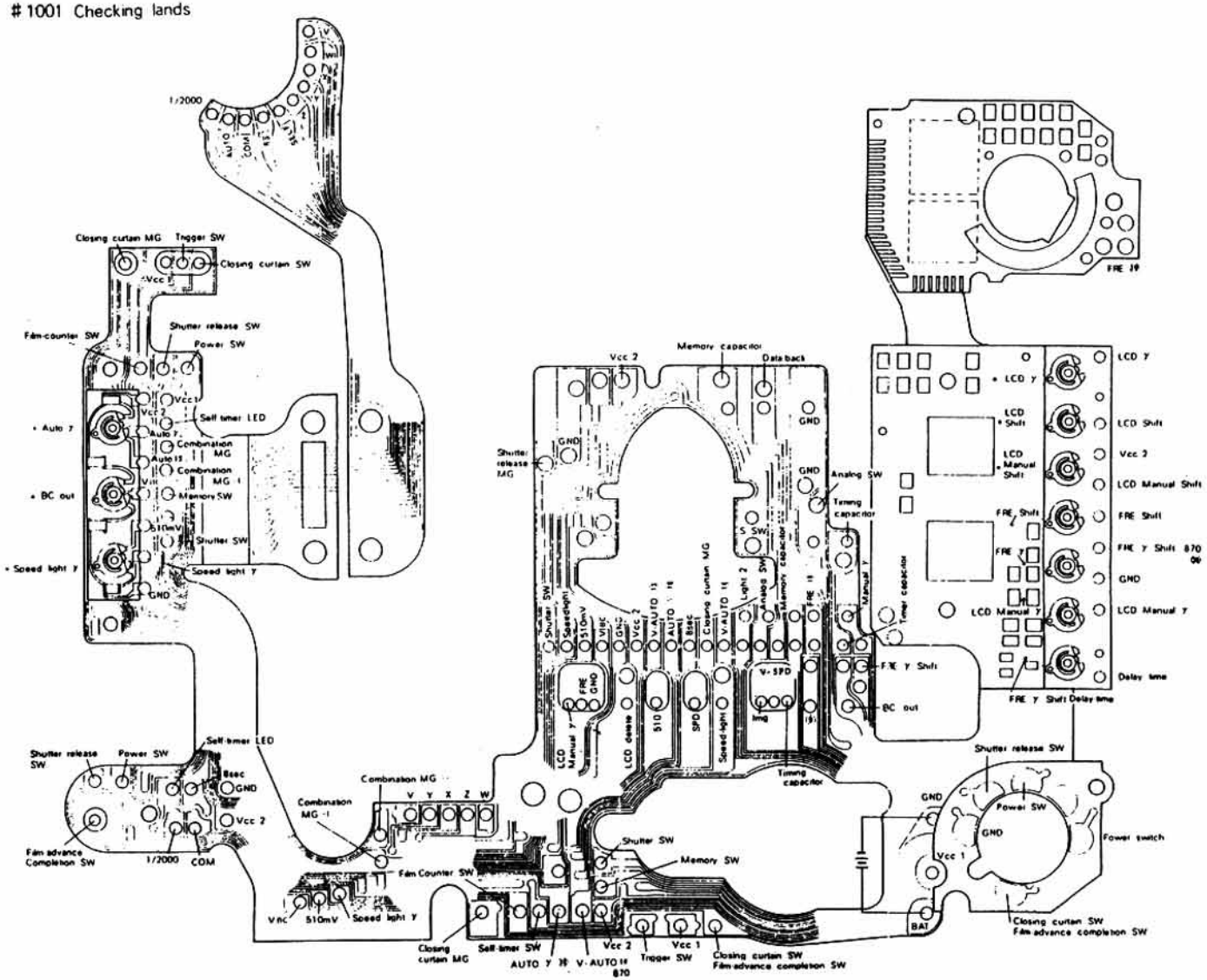

A49
F3

3-27 Shutter & Meter Accuracy Adjustments

☆ When using shutter tester with EV6 EV9 EV15

Mark	Name	Meaning
	Terminal	Name of check/adjustment procedures
	Input	Preparation Check Measurement
	Judgement	To see if the value conforms to the standard
	Treatment	Adjustment procedures
△	Connector	To be connected to "◎"
◎	Connectee	To be connected from "△"
↓	Arrow	Work sequence

3-27-1 Checking Sequence

START

1. Battery checker voltage adjustment
2. Manual shutter speed of 1/2000 sec. check/adjustment
3. Delay-time adjustment
4. Automatic shutter speed control adjustment
5. FRE adjustment
6. Automatic shutter speed control shift adjustment
7. Automatic shutter speed display adjustment
8. Automatic shutter speed display shift adjustment
9. Manual shutter speed display adjustment
10. Manual shutter speed display shift adjustment
11. Speedlight level adjustment
12. Ready-light operation check
13. Memory shutter speed check
14. Self-timer shutter speed check
15. Mechanical shutter speed check
16. X-contact time-lag adjustment
17. Shutter bounce adjustment
18. AF contact conductivity check
19. DATA contact conductivity check

END

Note: Checking sequence through 1 to 11 should be strictly observed.

Tool required:

Digital multi-meter J9032, etc.		DC regulated power supply J9001-1, etc.	
Shutter tester	J19036	Tool camera back	J15187
Tool lens	J18041-1	Dummy strobe	J18077
Driver	J15188	Standard reflector	J15196
Finder cover	J15191	DAS conductivity check tool	J18078

(1) When using shutter tester J18022-1, set the mode selector of shutter curtain travel to the horizontal direction.

(2) It is impossible to check the auto/manual shutter speeds of 1/1000 and 1/2000 with J18022-1, because the slit of J18022-1 is too broad.

(3) When checking, attach Tool camera back J15187 to the camera body and advance the frame counter more than 3 frames (Counter switch...OFF).

(4) Rotational direction of VR mentioned in this section indicates the direction viewed from the front side of the camera body (camera's lens-mount side).

3-27-2 Location of Variable Resistor for Adjustment

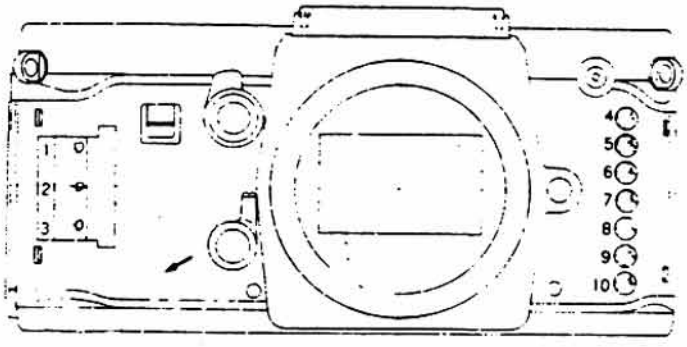

VR1: Automatic shutter speed control γ adjustment

VR2: Battery checker voltage adjustment

VR3: Speedlight level adjustment

VR4: Automatic shutter speed display γ adjustment

VR5: Automatic shutter speed display level adjustment

VR6: Manual shutter speed display shift adjustment

VR7: Automatic shutter speed control shift adjustment

VR8: FRE γ adjustment

VR9: Manual shutter speed display adjustment

VR10: Delay-time adjustment

3-27-3-1 Battery Checker Voltage Adjustment

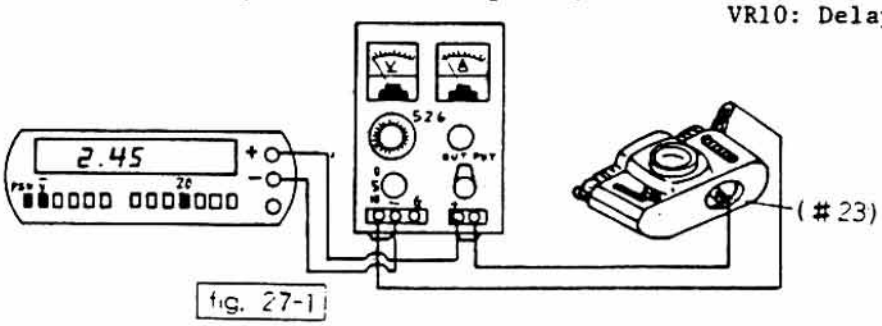

fig. 27-1

Connect Digital Voltmeter to DC regulated power supply and the camera body respectively as depicted in fig. 27-1.

3-27-3 Flow-chart

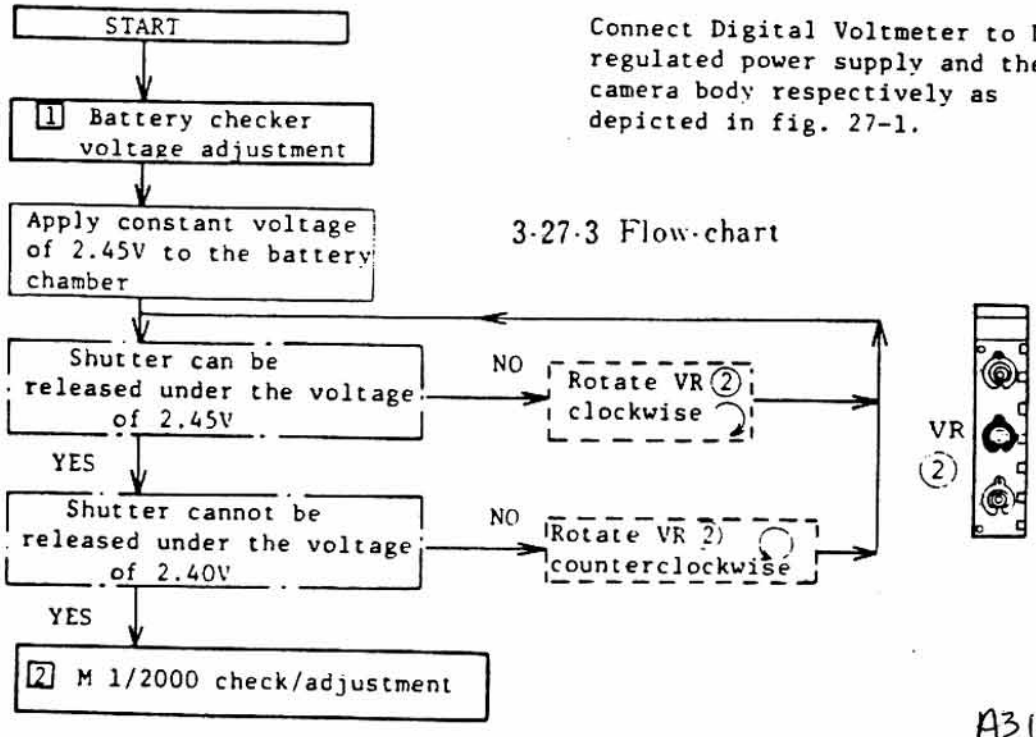

3-27-3-2 Manual Shutter Speed of 1/2000 sec. Check/Adjustment

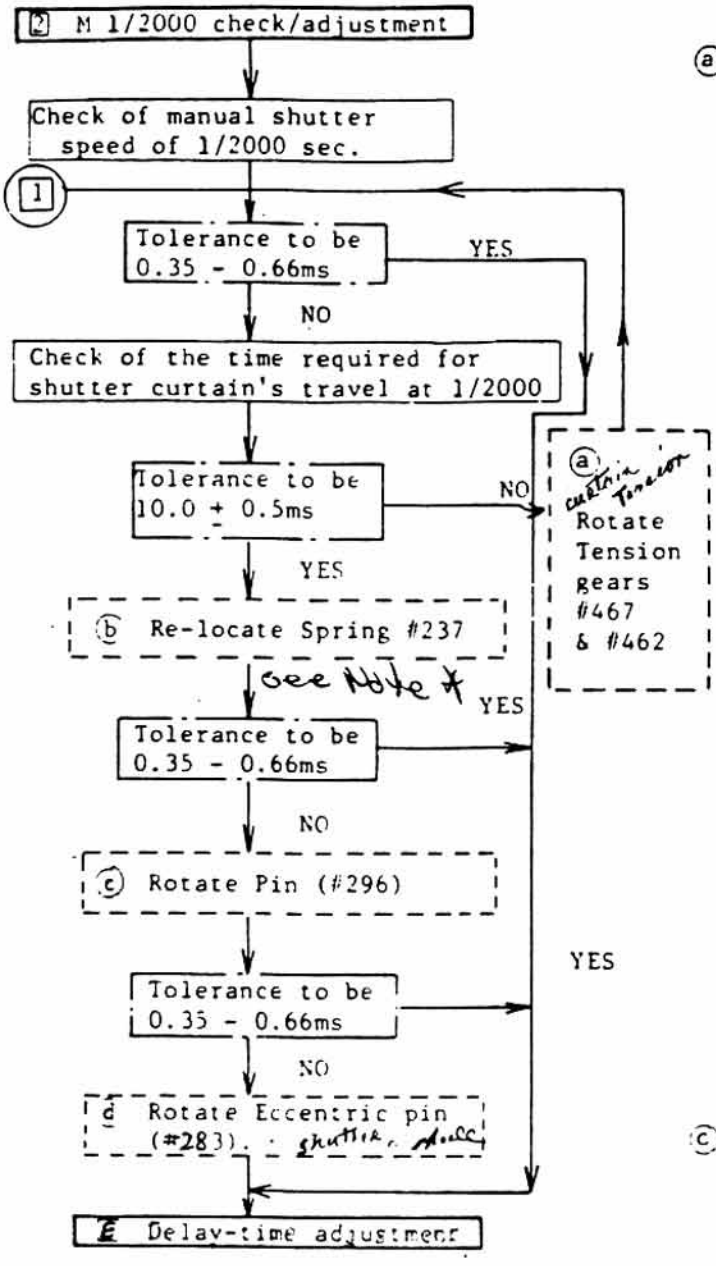

ⓐ To shorten shutter speed.

To lengthen shutter speed.

fig. 27-2

ⓑ Prior to adjustment, remore Unit base FA2-201. (shutter speed assy)

Spring engagement	Shutter speed
②→③	shortened (0.5→0.3ms)
②→①	lengthened (0.5→0.7ms)

Note: 2... Standard position

fig. 27-3

ⓒ Prior to adjustment, remove Unit FA2-381.
Clearance to be 0 - 0.2mm between Pin (#296) and Hook (#292) (For stable shutter speeds 1/500 & 1/1000)
After adjustment, apply adhesive #350.

ⓓ 1) Take out Front unit base and remove adhesive agent on Eccentric pin (#283).

2) Remove Unit FA2-201, then you can easily make adjustment with set driver (#2) through the access hole on Unit FA2-231.

3) After adjustment, apply adhesive #616 onto Pin.

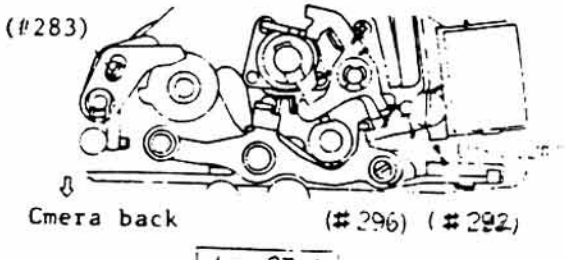

fig. 27-4

3-27-3-3 Delay-Time Adjustment

Delay-time is to adjust the period from trigger switch OFF-time to trigger-OFF signal transmitting time in order to harmonize the mechanical system with the electrical system.

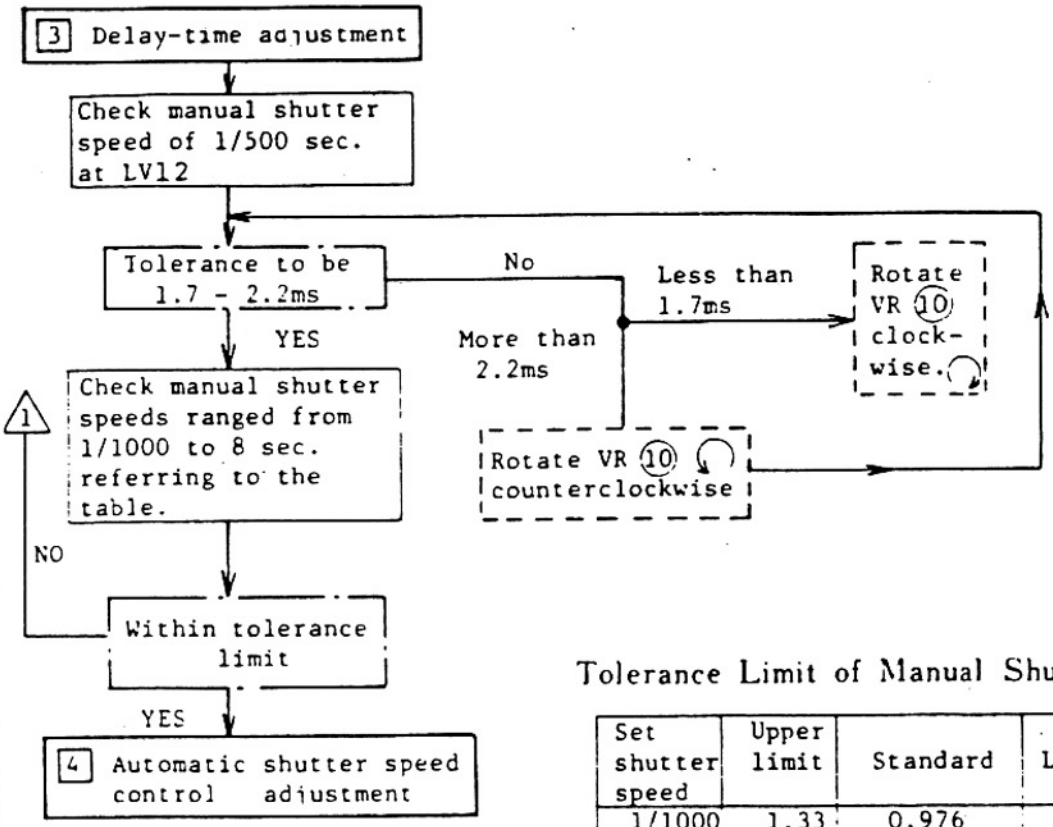

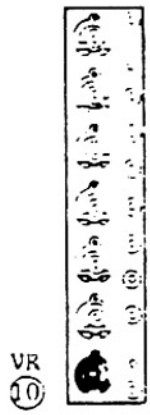

Tolerance Limit of Manual Shutter Speed

Set shutter speed	Upper limit	Standard	Lower limit
1/1000	1.33	0.976	0.71
1/500	2.66	1.95	1.43
1/250	5.34	3.91	2.86
1/125	9.62	7.81	6.34
1/60	19.2	15.6	12.7
1/30	38.4	31.2	25.3
1/15	76.9	62.5	50.8
1/8	153	125	102
1/4	308	250	203
1/2	616	500	406
1s	1231	1000	812
2s	2.46s	2000	1.62s
4s	4.92s	4000	3.25s
8s	9.85s	8000	6.50s

Note: Exposure balance between the middle of the frame and the both frame edges to be ± 0.2EV.

3-27-3-4 Automatic Shutter Speed Control γ Adjustment

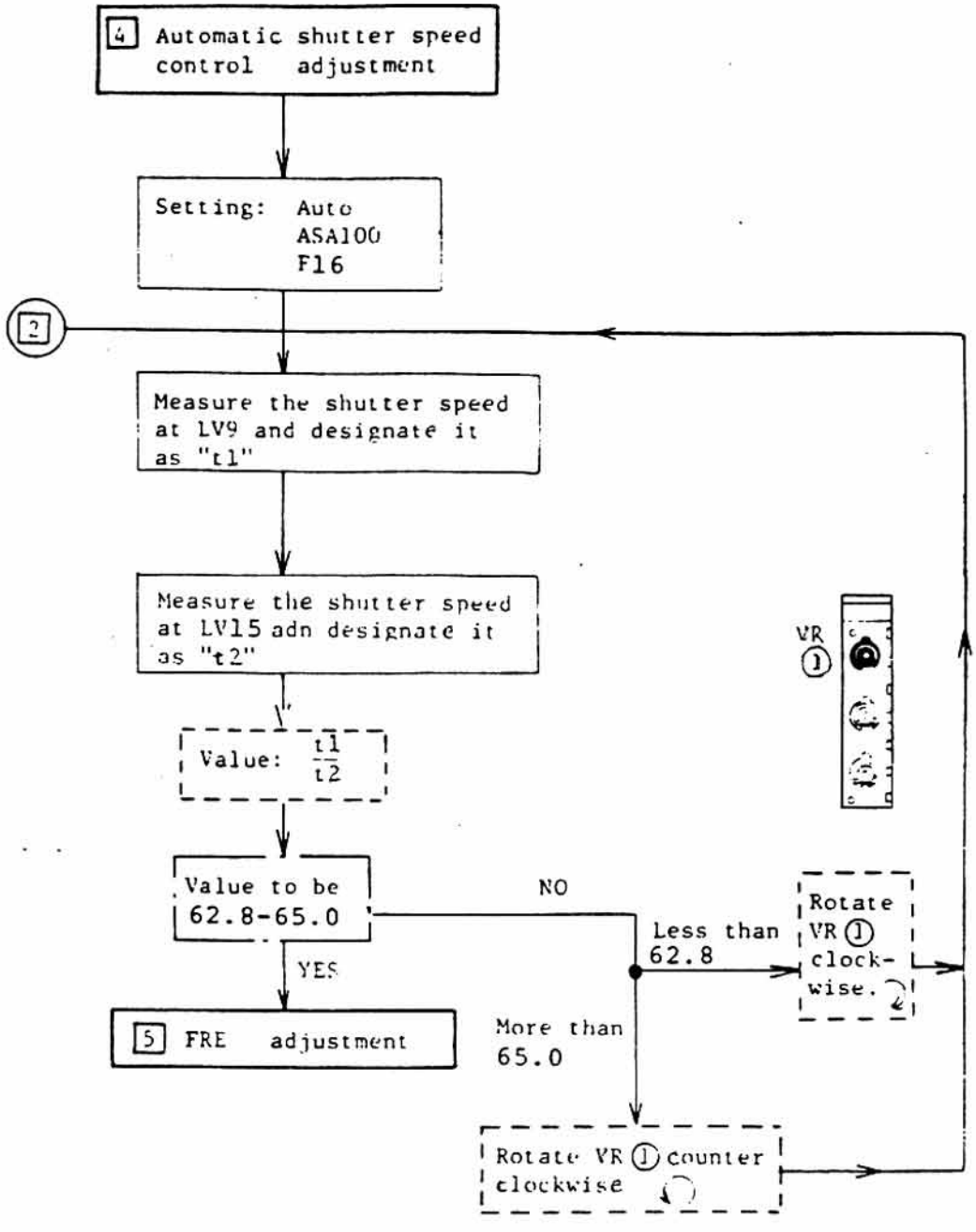

Note: 1) As for the shutter speeds of "t1" and "t2", measure 5 - 10 times, then take the aberage respectively.

2) Value t1/t2 has much effect on the automatic shutter speed display accuracy and thus it should strictly conform to the standard: 62.8-65.0.

3-27-3-5 FRE γ Adjustment

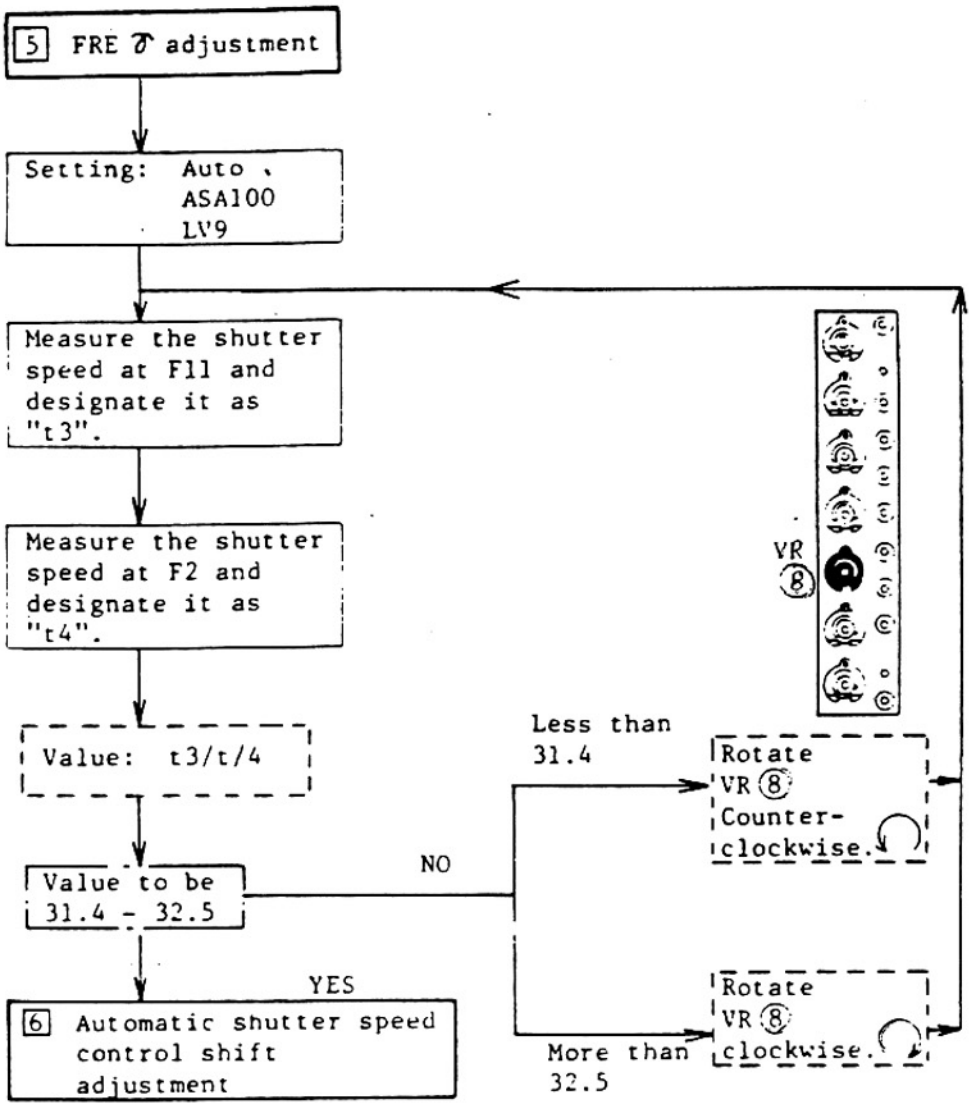

Note: Value t3/t4 has much effect on the automatic shutter speed display accuracy and thus it should strictly conform to the standard: 31.4 - 32.5.

3-27-3-6 Automatic Shutter Speed Control Shift Adjustment

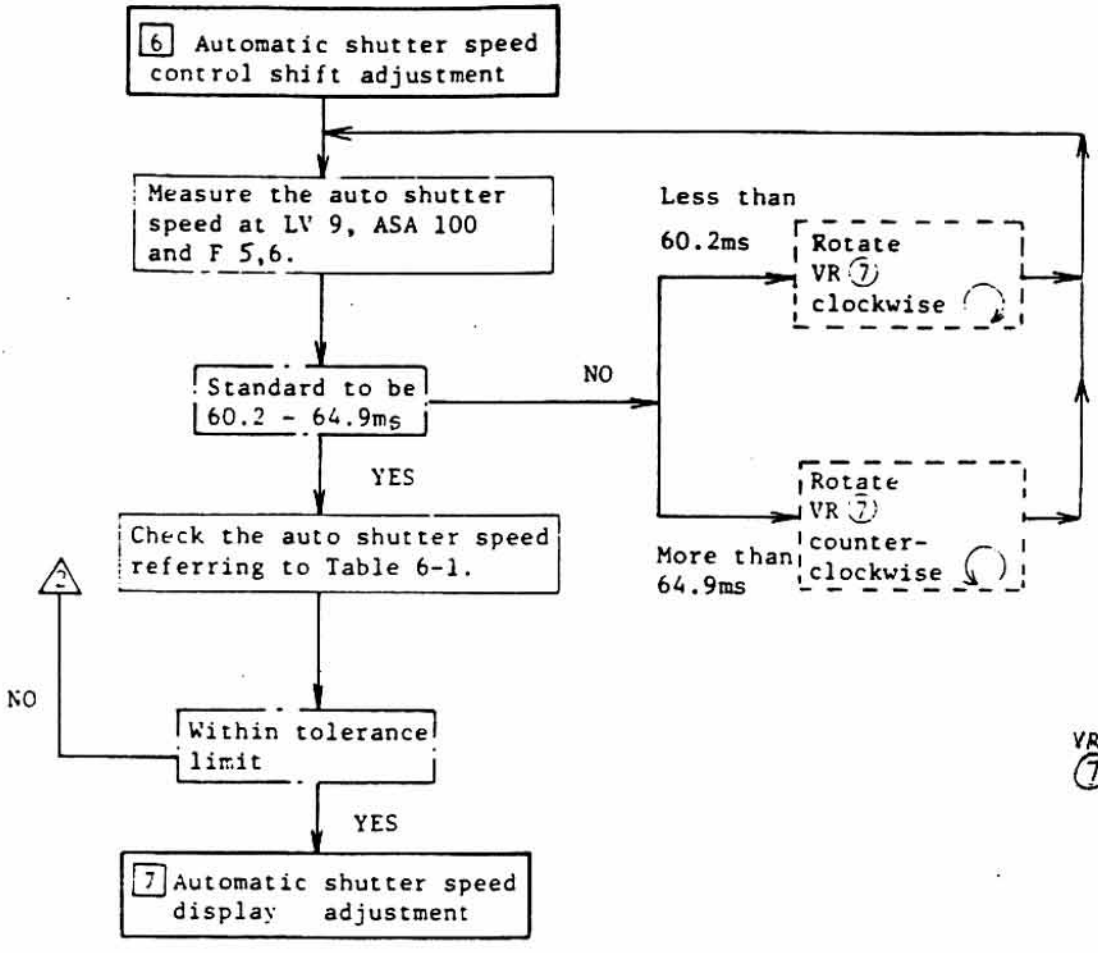

LV	ASA	F	Shutter speed	Tolerance limit(ms)
9	400	2	1/500	1.38-2.76
9	100	5.6	1/15	44.19-88.36
9	25	8	1/2	354-707
15	100	8	1/500	1.38-2.76
15	100	5.6	1/1000	0.62-1.54
6	100	5.6	1/2	354-707
6	100	8	1s	707 - 1414

Table 6-1 Auto Shutter Speed Accuracy

Note(1)When measuring 1/2000 sec., set the memory lock and use J19033.

(2)When determining "t3" and "t4", measure 5-10 times, then take the average respectively.

3-27-3-7 LCD Auto γ Adjustment

LCD means the grades of shutter speed display change in strict accordance with the change of light-intensity, ASA and F-stop (when one of these three factors is changed) e.g. when F-stop is changed from 2 to 16 (AV·6-step change), shutter speed display should change from "125" to "2" (TV·6-step change).

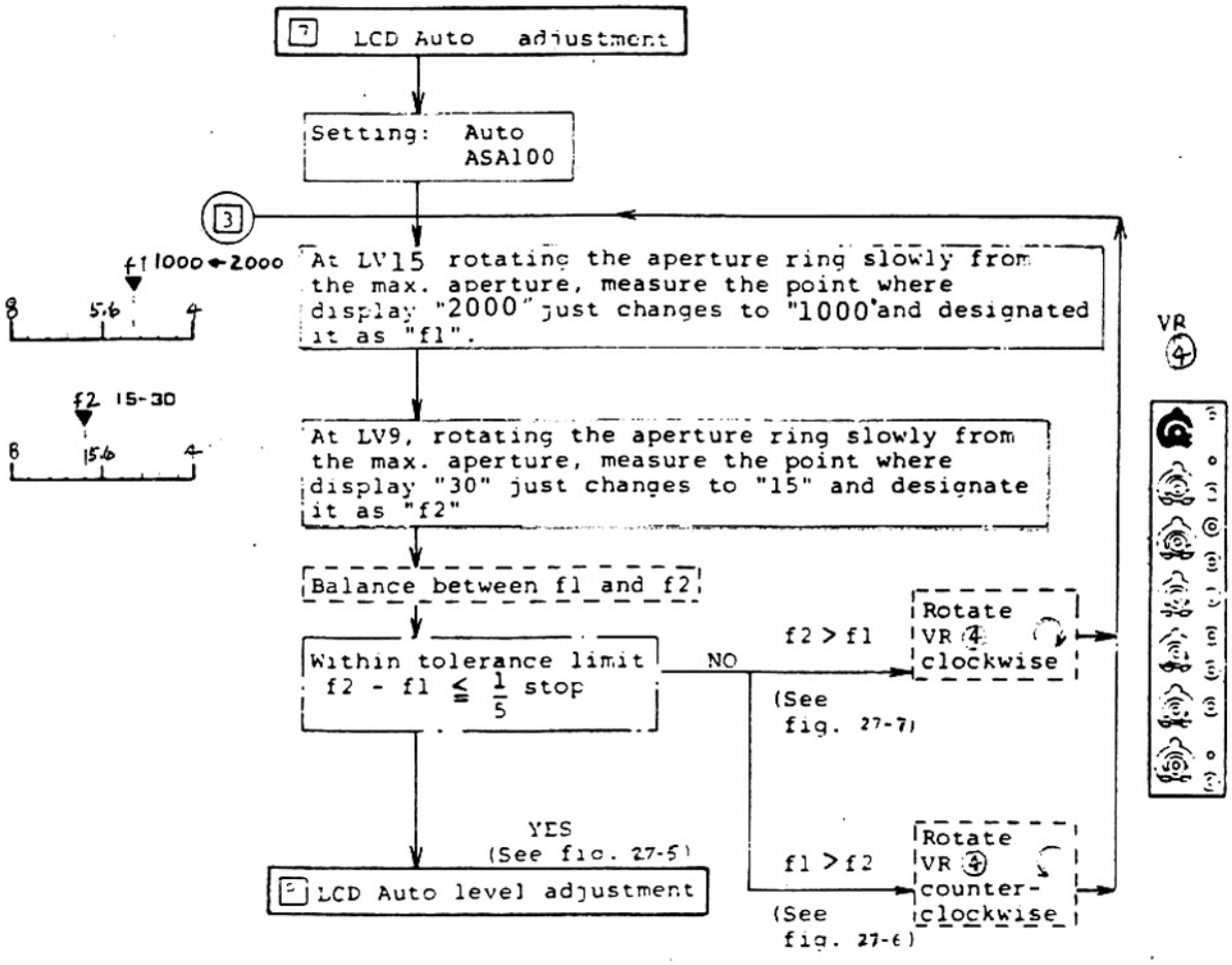

fig. 27-5

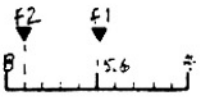

fig. 27-6

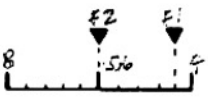

fig. 27-7

3-27-3-8 LCD Auto Level Adjustment

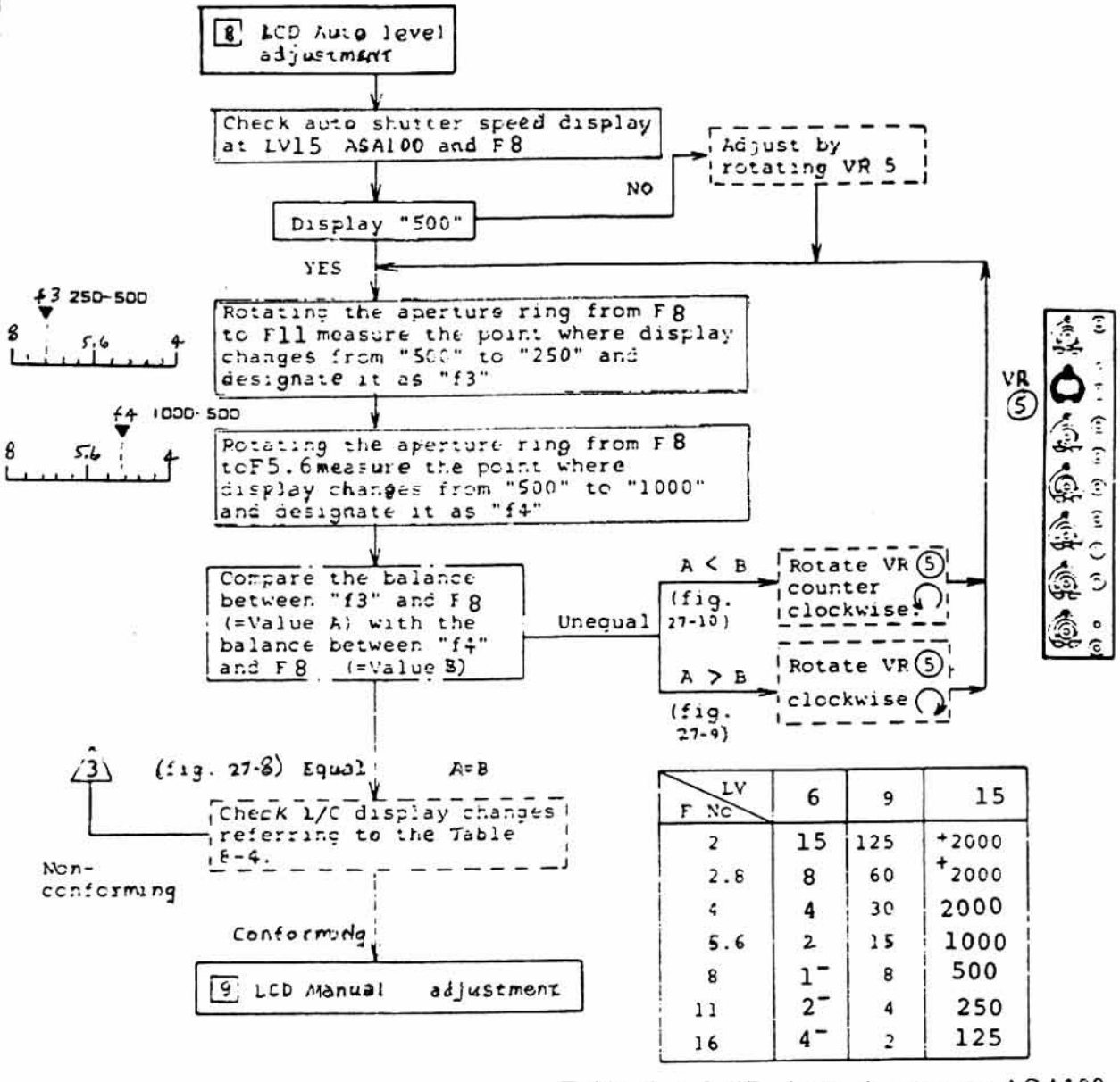

F No \ LV	6	9	15
2	15	125	+2000
2.8	8	60	+2000
4	4	30	2000
5.6	2	15	1000
8	1⁻	8	500
11	2⁻	4	250
16	4⁻	2	125

Table 8-4 LCD Auto Accuracy ASA100

Note: Middle value of dead zone to be within ± 1/2EV as compared with standard display value.

Range of dead zone: 2/3 - 4/3EV

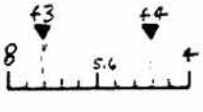

fig. 27-8

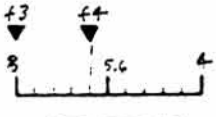

fig. 27-9

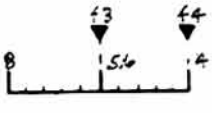

fig. 27-10

3-27-3-9 LCD Manual γ Adjustment

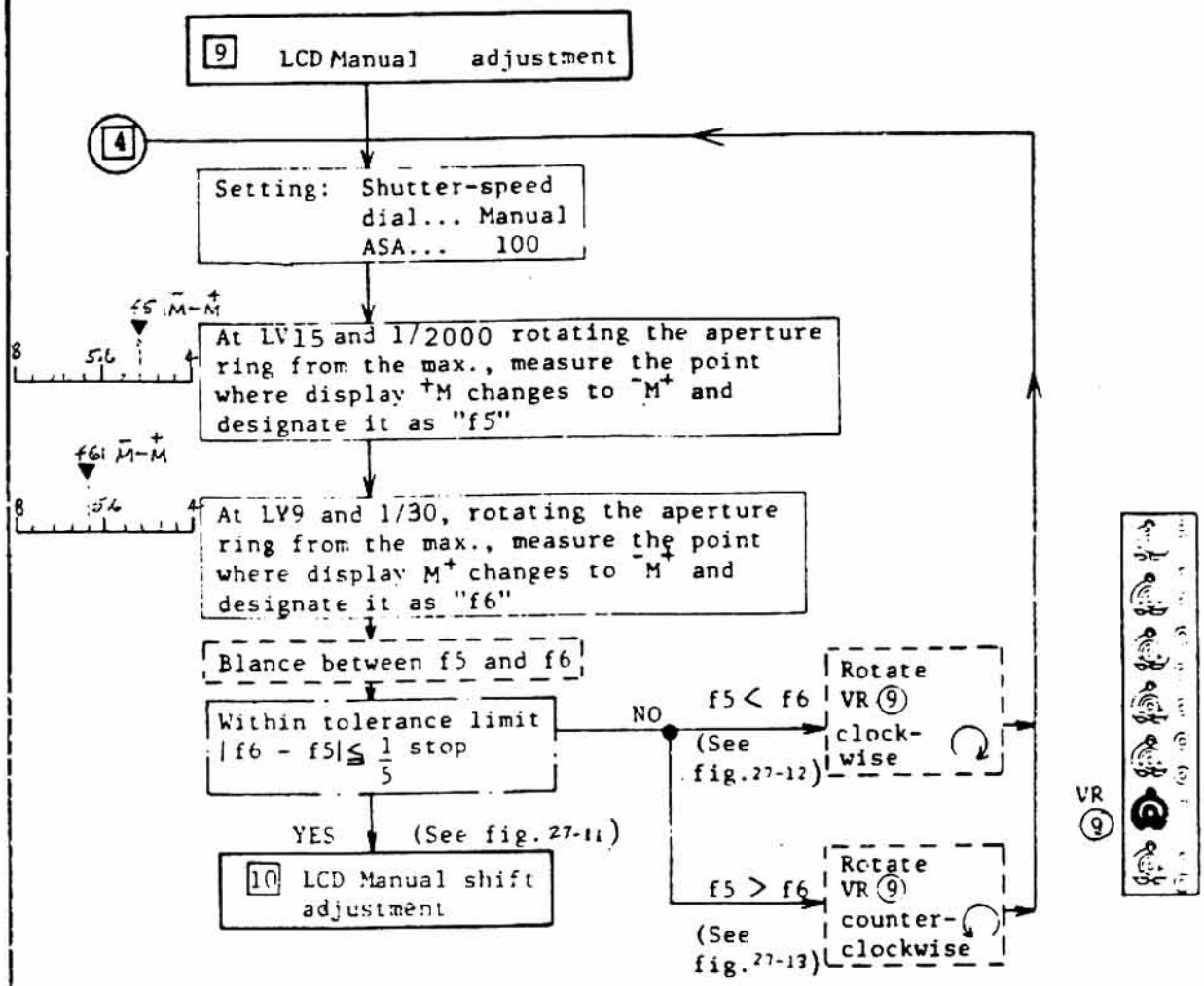

fig 27-11

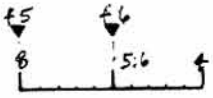

fig. 27-12

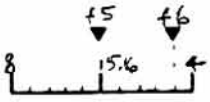

fig. 27-13

3-27-3-10 LCD Manual Shift Adjustment

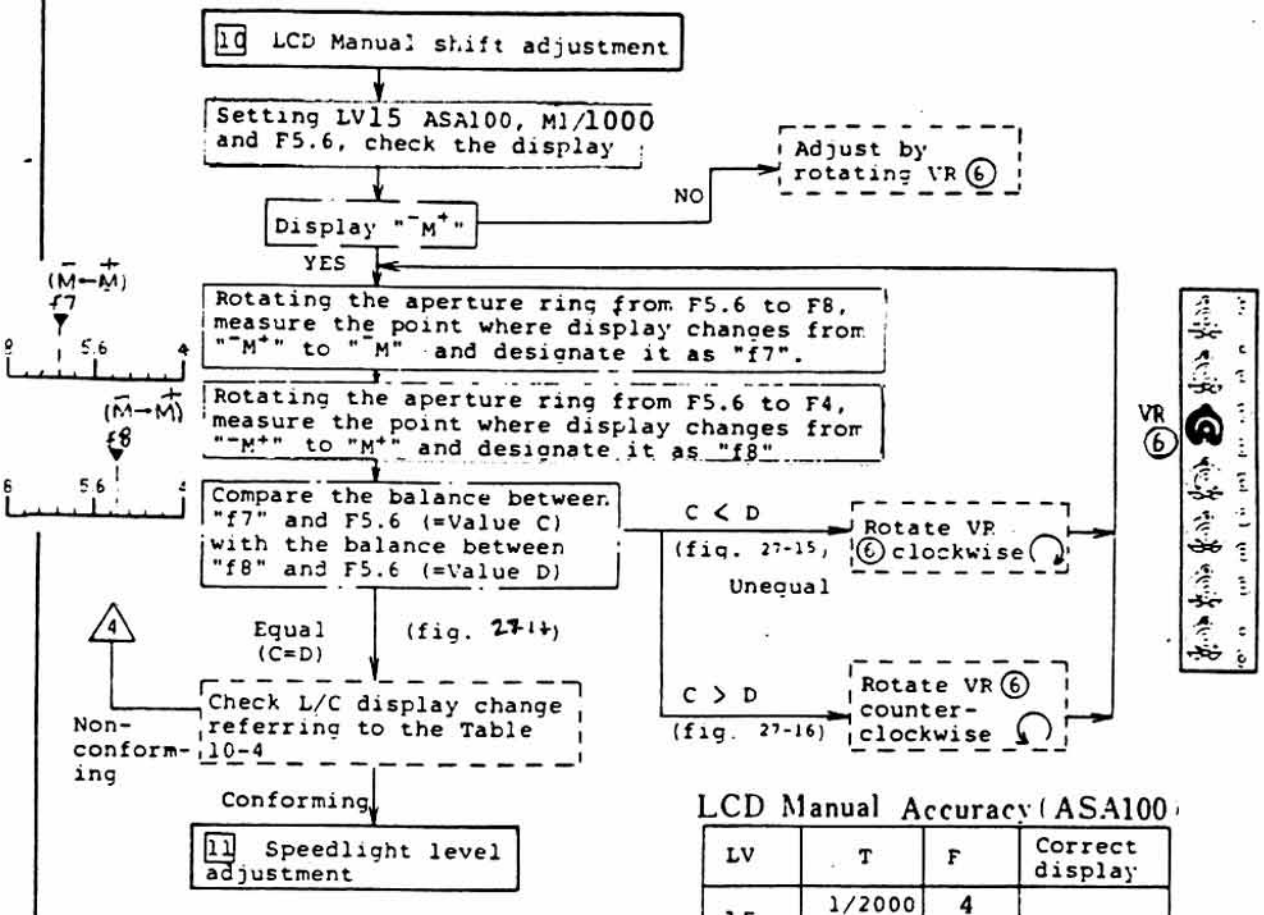

LCD Manual Accuracy (ASA100)

LV	T	F	Correct display
15	1/2000	4	⁻M⁺
	1/125	16	
9	1/125	2	
	1/2	16	
6	2s	11	

Note: Middle display accuracy of dead zone to be within ± 1/5EV at every measuring point

Range of dead zone: 0.5 ± 0.2EV

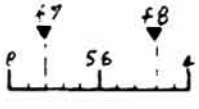

fig. 27-14

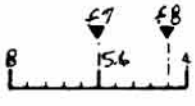

fig. 27-15

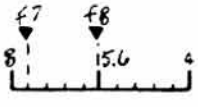

fig. 27-16

Section 4 Electric circuit

Contents

4-1 Precautions

1) On troubleshooting, it is most important to know a trouble correctly. For instance, if you have unstable shutter speeds delivery on Auto-setting, you should use care also to check the Manual-settings or the LCD's operation.

2) Note that this troubleshooting section will not cover all the troubles, which cause in the field-use of equipment. You then need to read the Outlines of Shutter Control System enough to analyze an unknown trouble for yourself.

3) This troubleshooting section does not show how to make adjustments of each trouble in practice. Please refer to 3-27 Shutter and Meter Accuracy Adjustments.

4) Tips for the Troubleshooting Chart:

   It is possible for you to measure almost every checking-land before removing the front plate.

   When measuring the voltage or the resistance of a checking-land, connect the test prod negative onto the camera body as the ground and the prod positive onto the checking-land to be tested.

   It is to be recommended to use an oscilloscope for every voltage measuring, as well as checking of wave forms.

5) Abbreviations and symbols in alphabetical order

   BAT ----- Battery (its terminal positive)

   BC ----- Battery checker

   BP ----- Back plate of LCD

   COM ----- Terminal for selecting Manual resistors FA1-1007

   GND ----- Ground or Earth

   H ----- Voltage is high

   I-SPD --- Current flow to SPD

   L ----- Voltage is low

   MD ----- Motor drive

   MG ----- Magnet (Electromagnet or combination magnet)

   SW ----- Switch

   V-AUTO -- Output voltage for automatic shutter control

   Vcc ----- Power supply voltage

   V-COM --- Voltage of COM

4-2 Checking Lands and External Figures of Main Parts

4-2-1 FPC 1 #1001 (Checking lands)

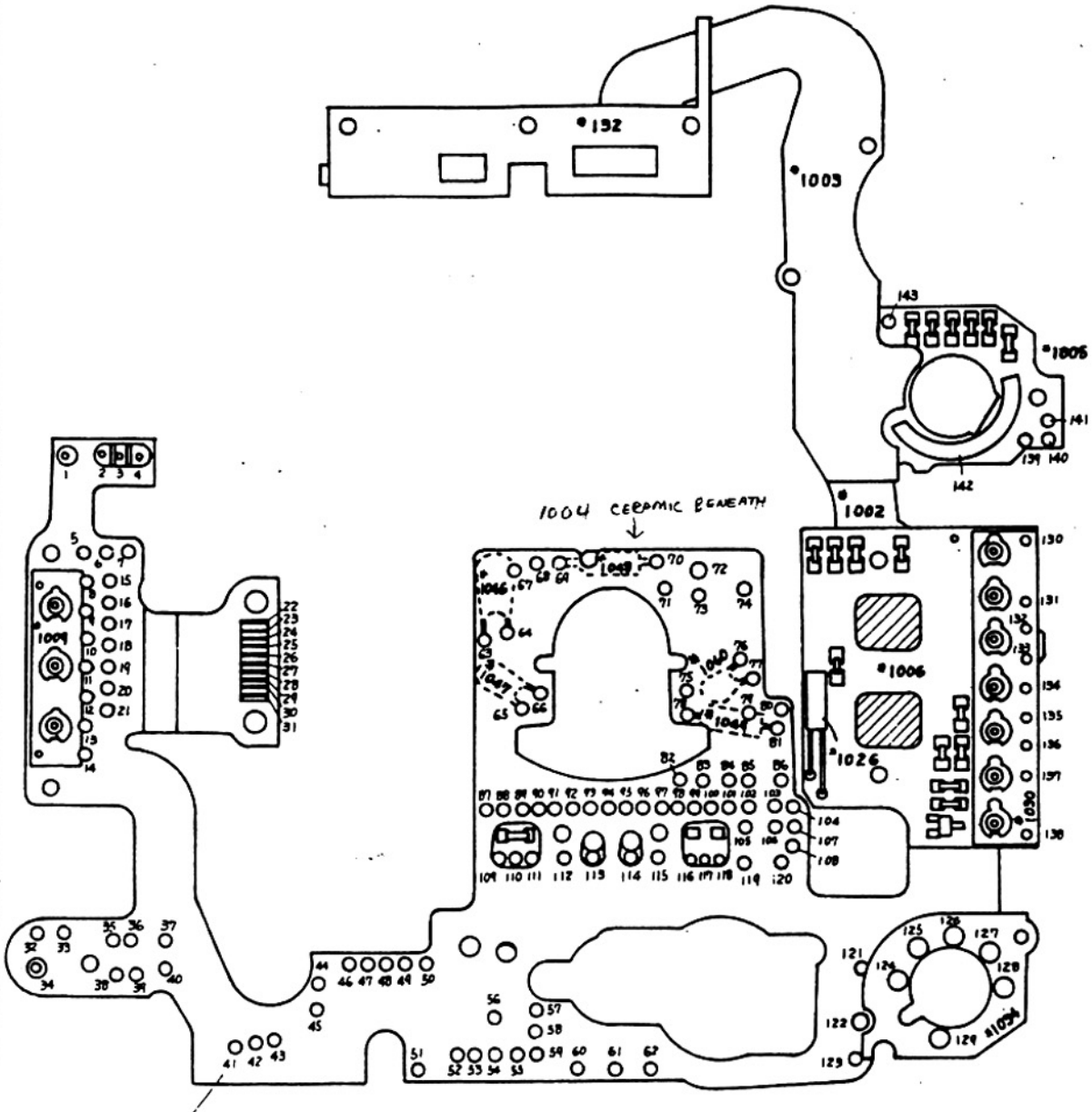

For example, this checking land is called F-41.

fig. 1

4-2-2 # 1001 Checking lands

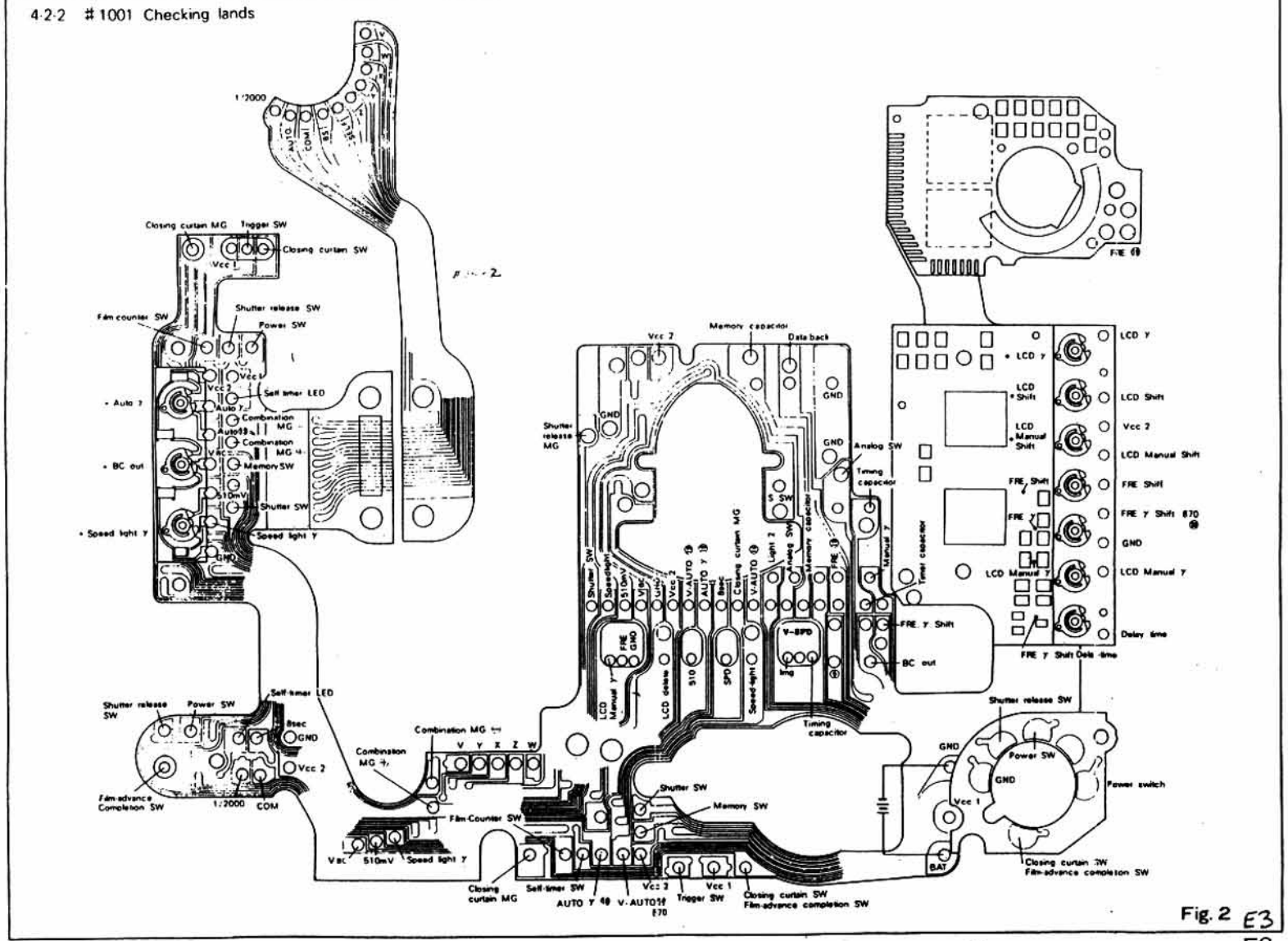

Fig. 2 E3

F3

4-2-3 Ceramic, exposure information #1004 (Checking lands)

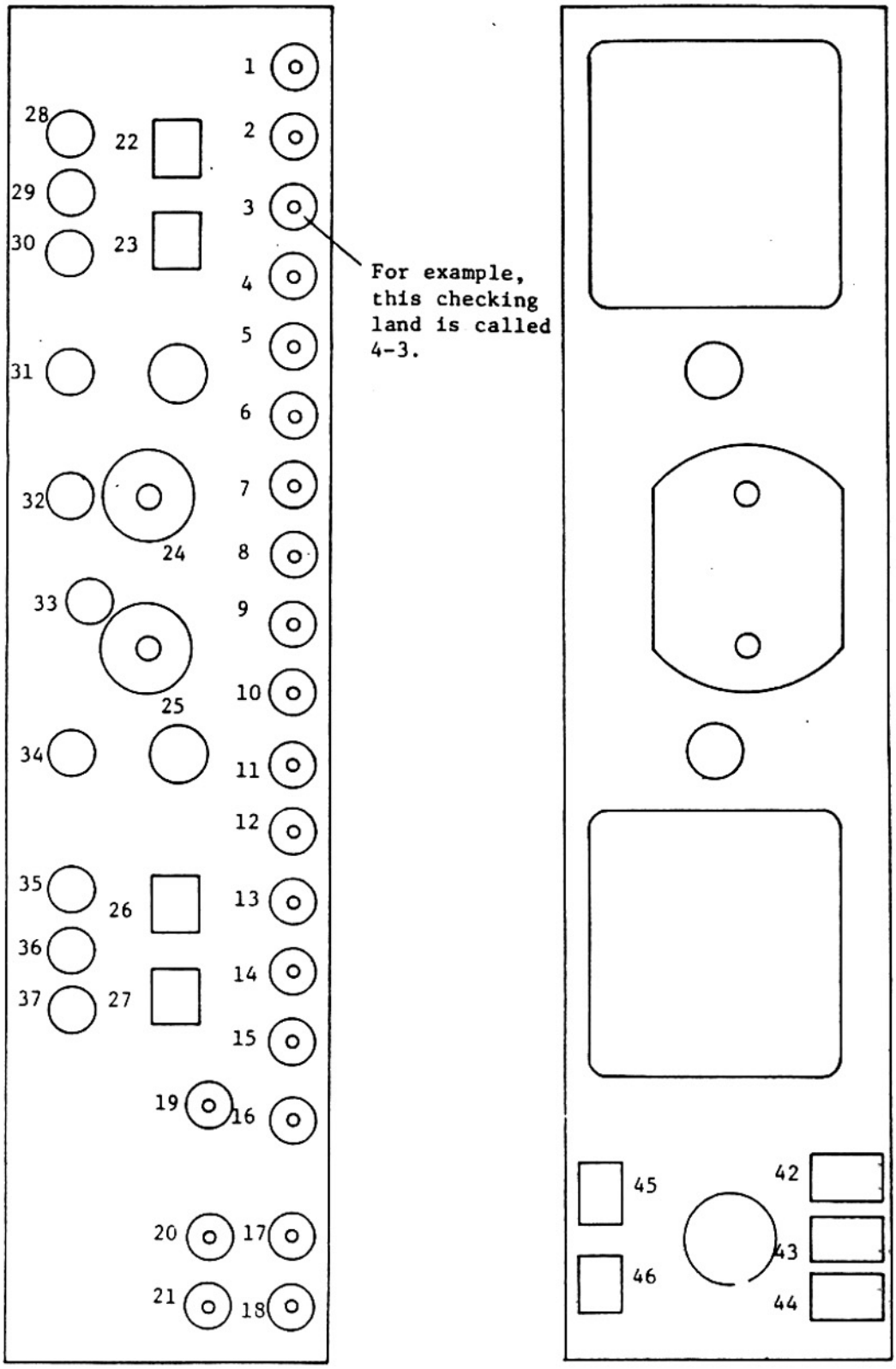

fig. 3

4-2-4 Ceramic, exposure infomation #1004 (External figure)

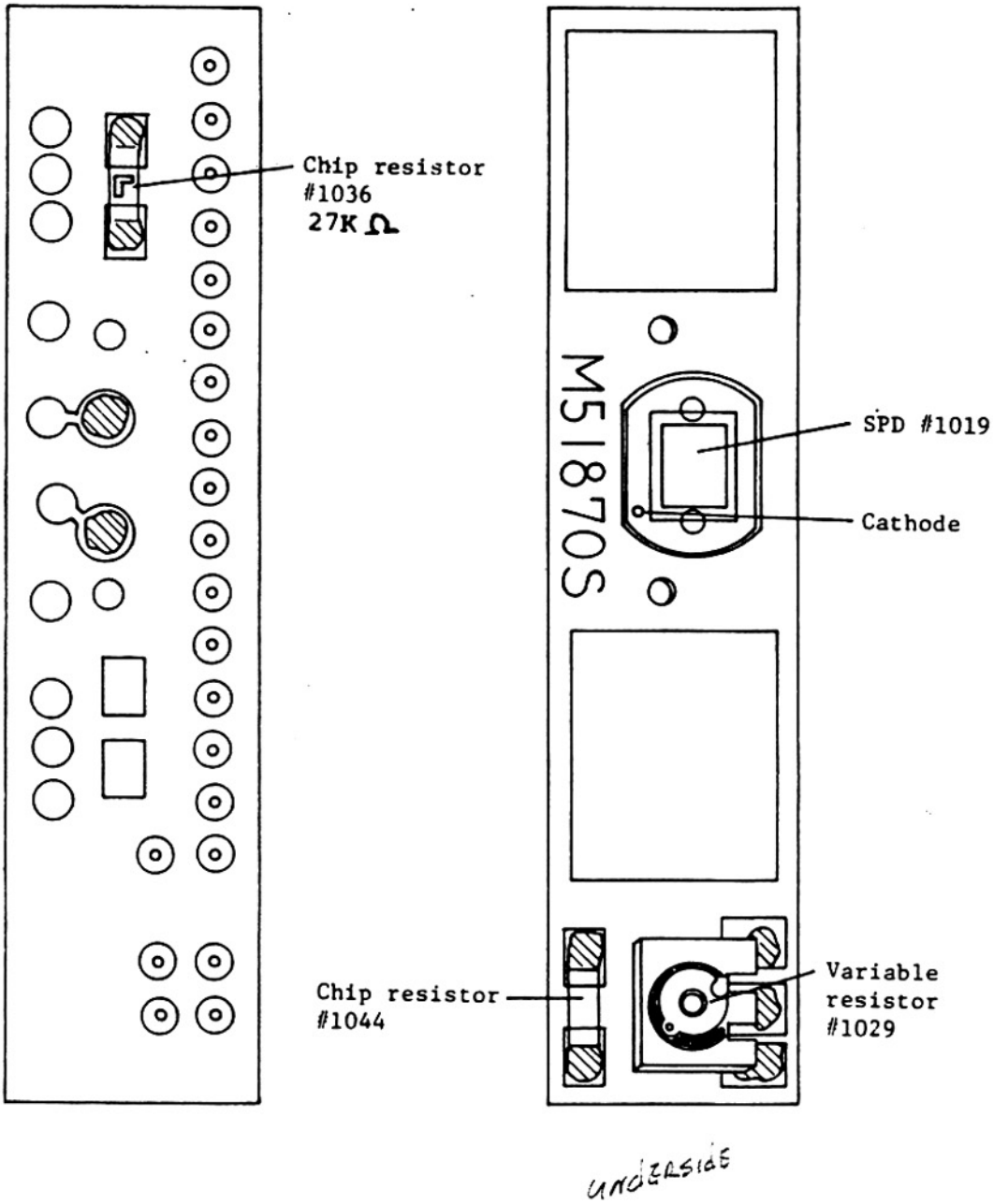

fig. 4

4-2-5 Ceramic, LCD #1005 (Checking lands)

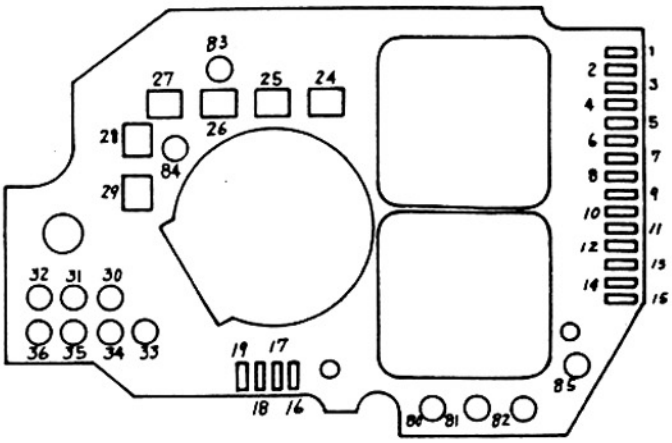

For example, this checking land is called 5-80.

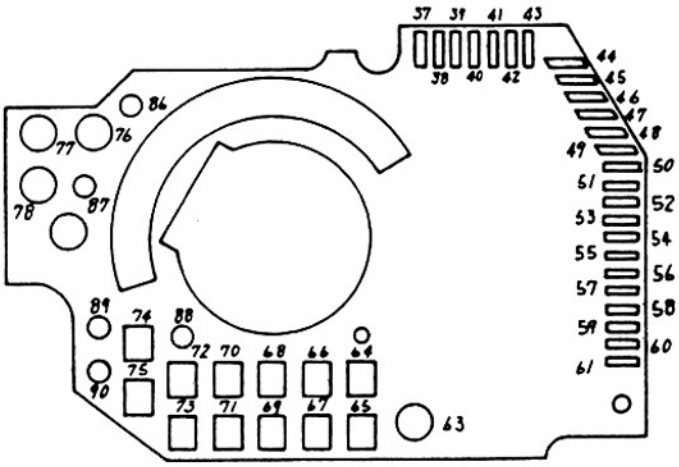

fig. 5

4-2-6 Ceramic, LCD #1005 (External figure)

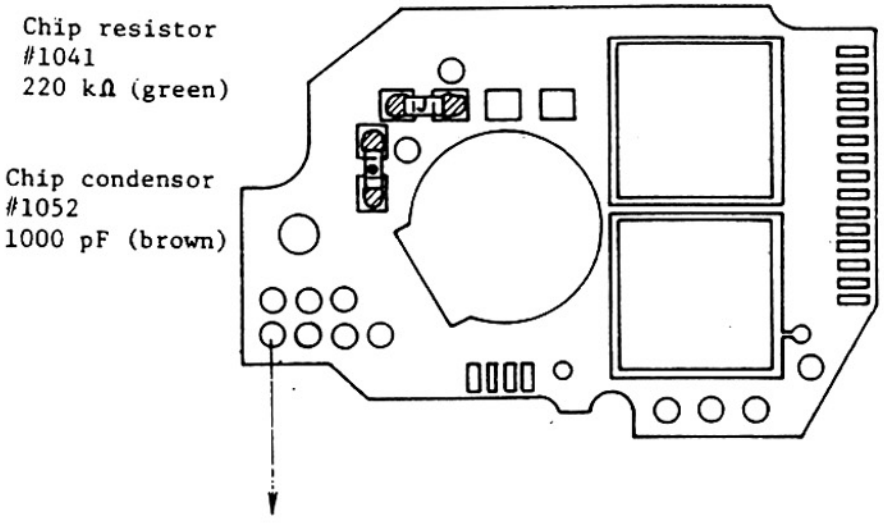

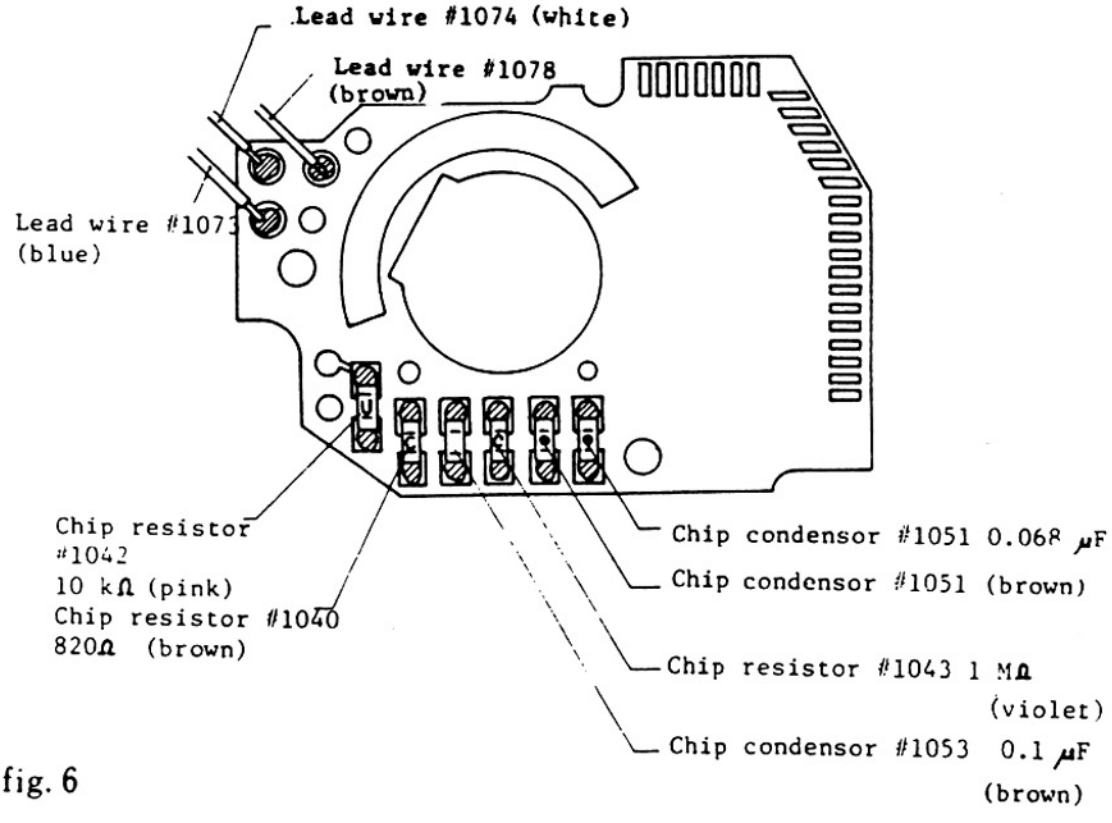

fig. 6

4-2-7 Ceramic, Quartz Oscillator #1006 (Checking lands)

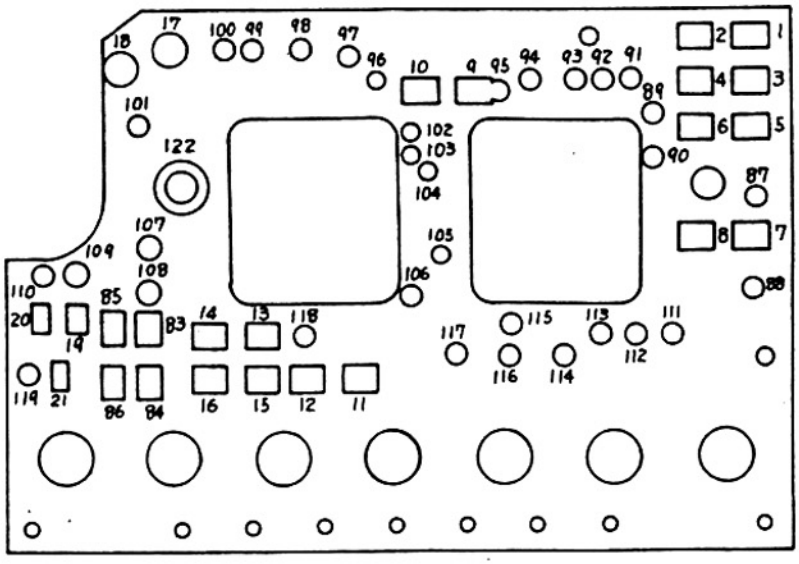

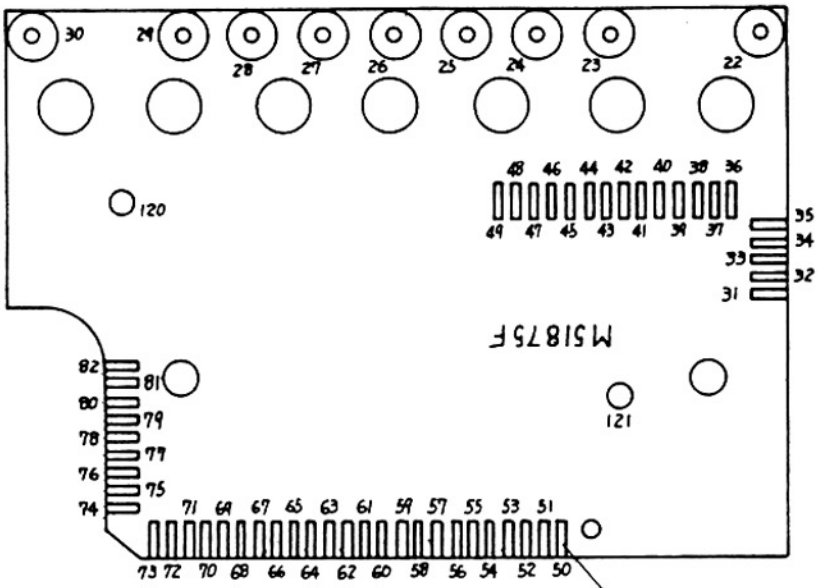

For example, this checking land is called 6-50.

fig. 7

116

4-2-8 Ceramic, Quartz Oscillator #1006 (External figure)

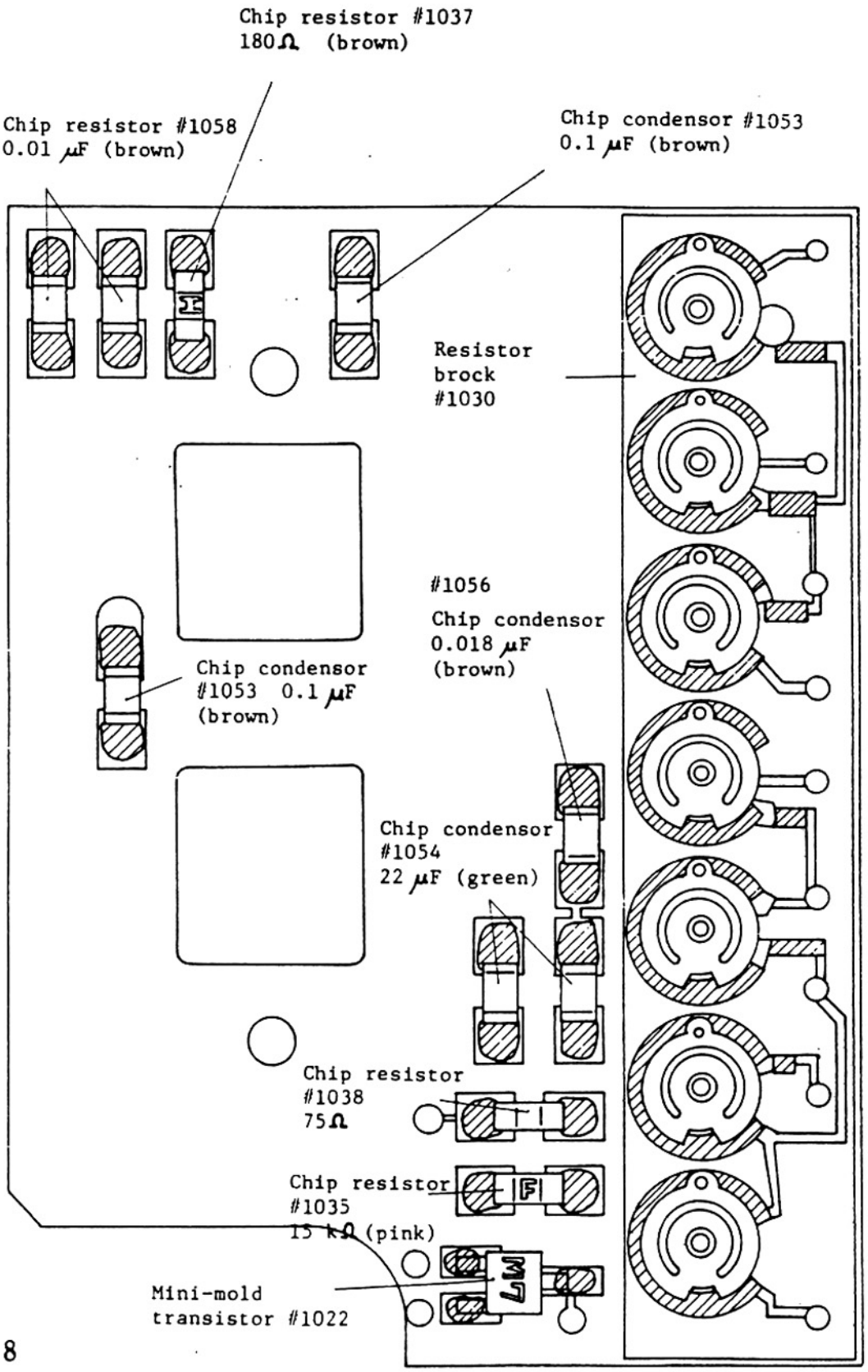

fig. 8

4-2-9 Resistor Block A #1009

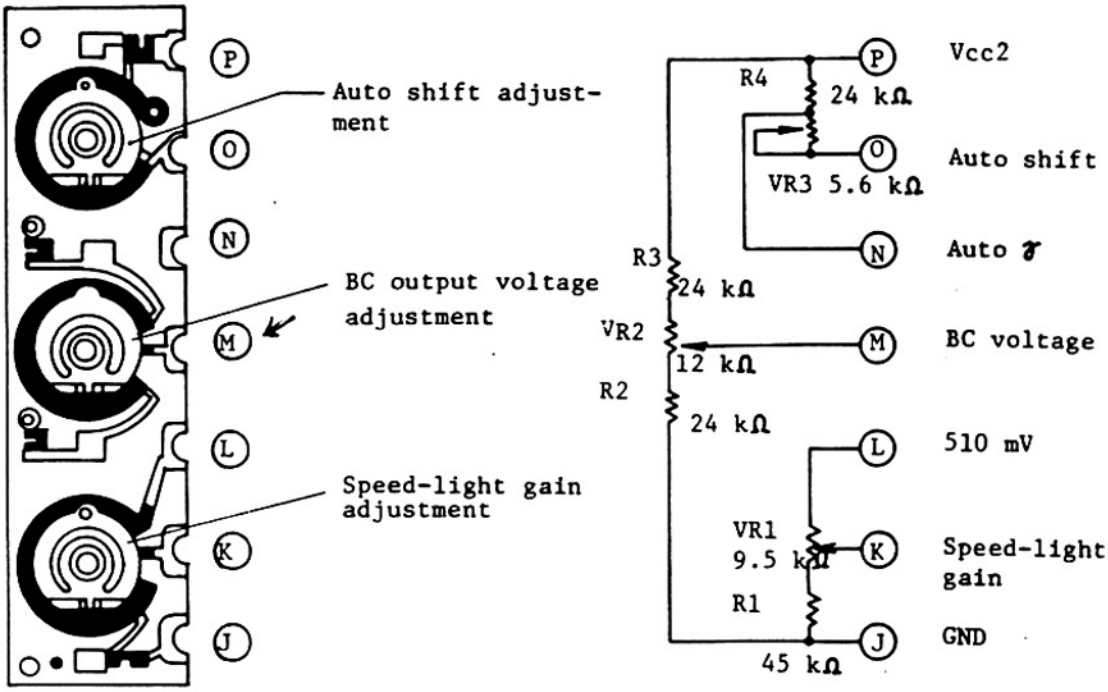

fig. 9

Note: Resistance value of VR (Variable Resistor) is shown for its maximum.

Reference Voltages of Checking Lands.

(P)	3.0 V	
(O)	2.2 - 2.8 V	Turning VR3 counterclockwise shortens the shutter speed on Auto.
(N)	2.2 - 2.8 V	
(M)	1.25 - 1.6 V	Turning VR2 clockwise increases BC output voltage.
(L)	0.48 - 0.52 V	
(K)	0.4 - 0.52 V	Turning VR1 clockwise decreases Speed-light gain, which is a current flow to the speed-light control.
(J)	0 V	

4-2-10 Resistor Block B #1030

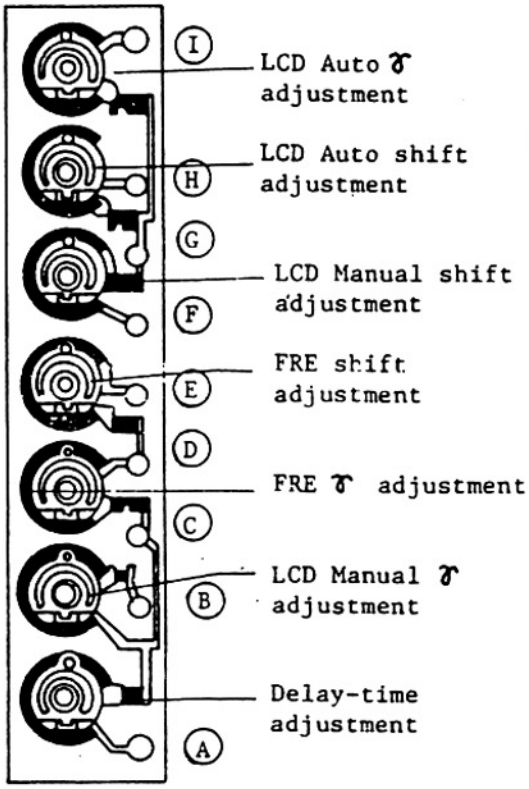

fig. 10.

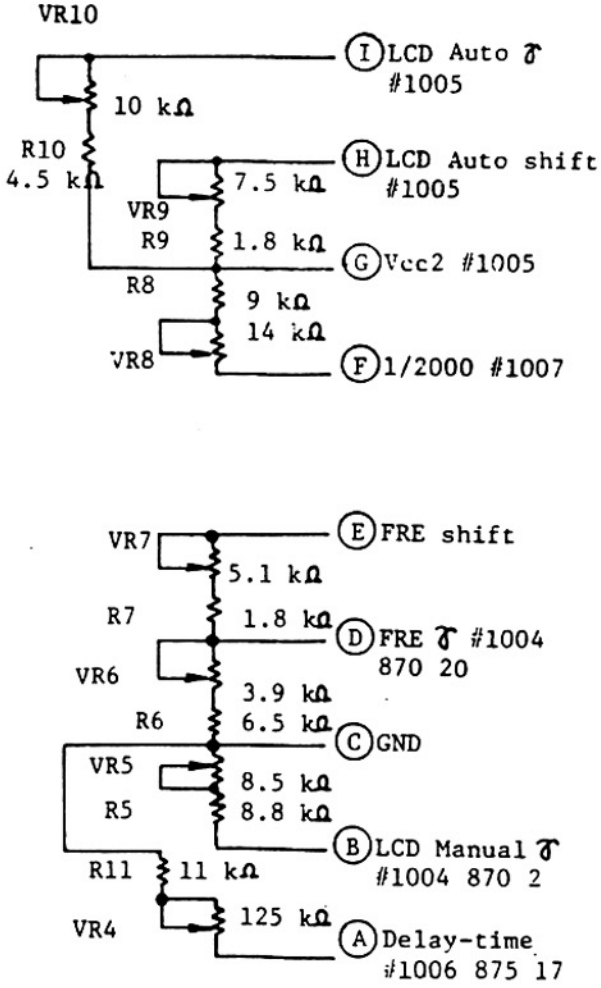

Note: Resistance value of VR is shown for its maximum.

Reference Voltages of Checking Lands

Ⓐ	0.4 - 0.8 V	Turning VR4 clockwise makes the Delay-time long.
Ⓑ	0.24 V	Turning VR5 clockwise reduces the coverage of the display M on Manual.
Ⓒ	0 V	
Ⓓ	0.24 V	Turning VR6 clockwise reduces the FRE τ.
Ⓔ	0.3 - 0.5 V	Turning VR7 clockwise slows the shutter speeds on Auto.
Ⓕ	2.8 V	Turning VR8 counterclockwise changes the coverage of the display M on Manual in the order of M → [illegible] → [illegible].
Ⓖ	3.0 V	
Ⓗ	2.88 V	Turning VR9 clockwise changes a display on Auto into the one of slower shutter speed.
Ⓘ	2.2 - 2.8 V	Turning VR10 clockwise increases the coverage of a display of shutter speed on Auto.

4-3 Outlines of Shutter Control System

4-3-1 Power Supply

1) Depressing the shutter release button half-way closes Power SW. It turns on Transistor #1022 to increase Vcc1 until Vcc1 is equal to Vcc2. Thus, the current flow is supplied to the whole circuit of camera.

2) Setting the shutter release button free opens Power SW, and the voltage of n^3 goes high to start timing of 16 sec. for holding the circuit ON. After the lapse of 16 sec., the voltage of Timer-OFF goes low, and #1022 turns off to drop Vcc2 to 0 V. It opens the circuit.

3) When Vcc1 is equal to Vcc2 and the circuit is closed, closing Memory SW simply resets the timing of 16 sec. for holding the circuit ON. Thus, the timing of 16 sec. will not start again before Memory SW opens.

4) For instance, first Power SW opens in 5 sec. after its closing. Then Memory SW closes in 10 sec. after this Power SW opening. Memory SW also opens in 10 sec. after its closing. From this moment, Vcc1 will reach Vcc2 in 16 sec.. Totally, it is 41 sec. from closing of Power SW to dropping of Vcc2 to 0 V.

5) When timing 16 sec., releasing the shutter closes Shutter SW and resets the timing of 16 sec.. Then, after Mirror moves down to the viewing position, the circuit is held closed in 16 sec..

6) While the LCD remains ON, the circuit is being closed or Vcc1 is held equally to Vcc2.

7) Opening Power-lock SW holds Power SW and Release SW open. Subsequently, during timing of 16 sec., opening Power-lock SW will not turn off the LCD.

8) When the MD is mounted, the power supply connector of MD pushes up MD switch #37 and cancels the power supply from the batteries installed in camera. In this way, MD supplies Vcc1 to the circuit of camera.

fig. 11 Power circuit

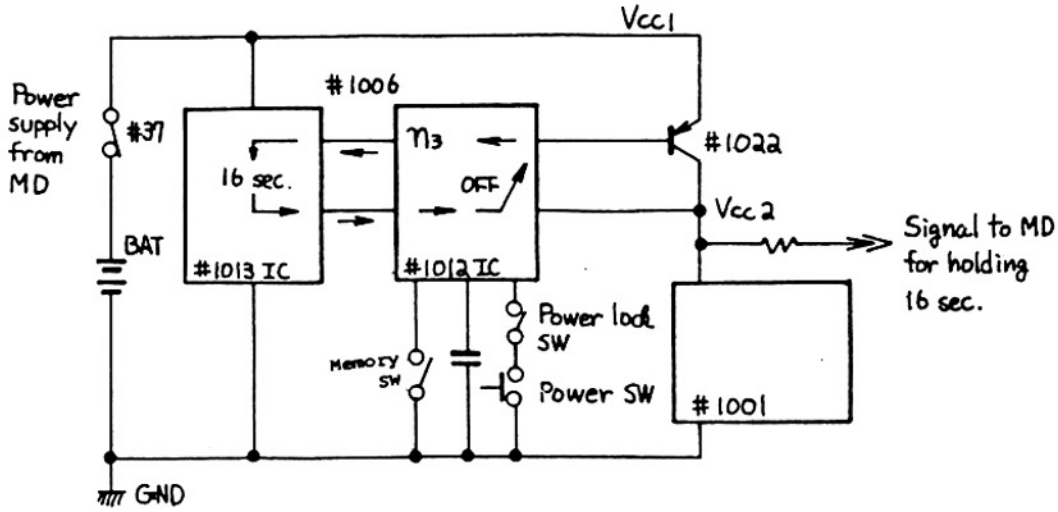

fig. 12 Timing chart of power circuit

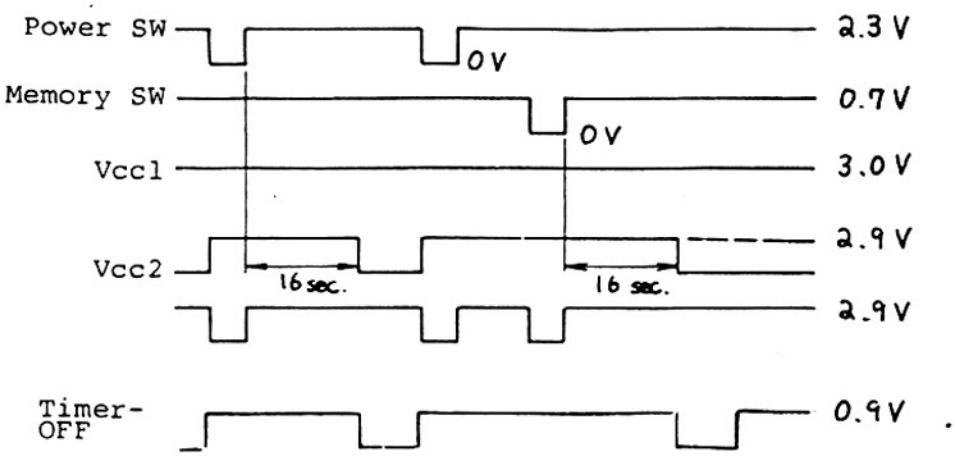

tablel 1 Checking lands in power circuit

Power SW ----- F-7 F-33 6-52

Memory SW ---- F-19 F-58 6-70

Vcc1 --------- F-2 F-15 F-61 F-122 6-50 6-110

Vcc2 --------- F-8 F-20 F-40 F-59 F-65 F-69 F-92 6-1 6-86 6-119 6-68

η3---------- 6-116

Timer-OFF ---- 6-112

4-3-2 Shutter Release

1) Shutter release operation depends on the following conditions;

a The voltage of the installed batteries should be more than 2.45 V.

b Shutter SW opens. (Mirror is not locked up to the taking position)

c Film-advance completion SW and Closing curtain SW open. (Film-advancing is completed)

2) Depressing the shutter release button closes Release SW, and the transistor on #1092 becomes ON. Next, the voltage at #1013 goes low to supply the output for shutter releasing.

3) At this moment, if the above conditions are fulfilled, the voltage of Combination MG for shutter release goes low to draw the current from Condensor #1046. It clears the magnetic power of Combination MG to free the release lever for shutter curtains travel.

4) When Power SW is already closed by depressing the shutter release button half-way and Vcc2 reaches 3V, closed Release SW drops direct the voltage of Combination MG. However, when both Power SW and Release SW simultaneously are closed by depressing the shutter release button all the way at first hand, it takes approx. 62.5 ms to drop the voltage of Combination MG after closing Power SW.

5) In the shutter-releasing cycle, Closing curtain starts to travel. At this moment, setting the shutter release button free closes Closing curtain SW. Thus;

a The signal for the film-advancing is transferred to MD. (With a delay of approx. 20 ms, the MD works)

b Condensor #1046 is charged.

c The next shutter release is locked.

6) However, when the shutter release button is held depressed and Release SW remains closed also after completing the shutter release, Closing curtain SW cannot be closed to perform the above three operations 5-a, 5-b and 5-c.

7) Under these conditions, the film-advancing first closes Film-advance completion SW, and then opens Closing curtain SW. After completing the film-advancing, Film-advance completion SW opens. Thus, the condition 1-c is ready. And if the conditions 1-a and 1-b are fulfilled, the next shutter releasing is possible

8) When the shutter is released by MD, the signal from the MD direct drops the voltage at the collector of the transistor in #1092.

fig. 13 Shutter release circuit

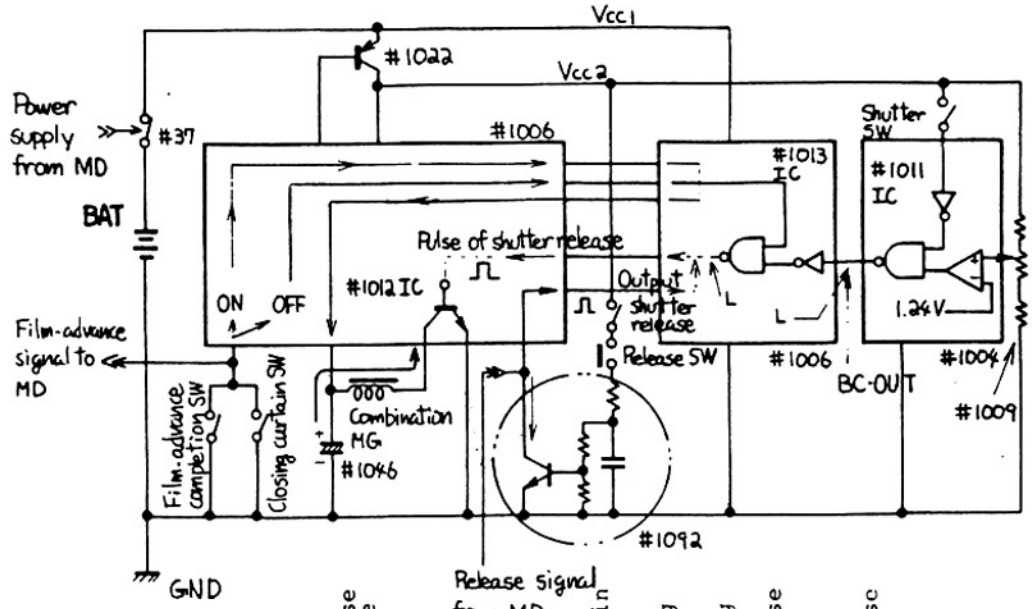

fig. 14 Timing chart of shutter release circuit

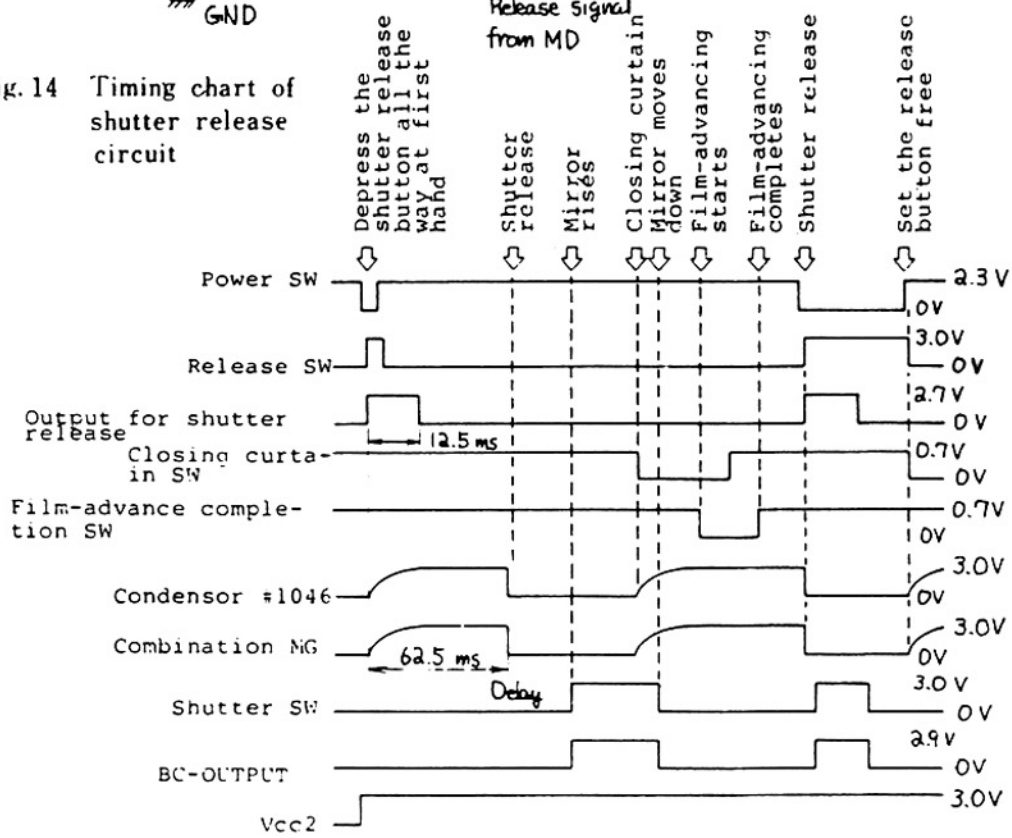

table. 2 Checking lands in shutter release circuit

Release SW ------- F-6 F-32 F-125 6-10 6-51

Release output --- 6-94 BC OUTPUT ----- F-106 6-80 6-85

Closing curtain SW -----
Film-advance completion SW --- F-4 F-34 F-62 F-129 6-65

Combination MG ---- F-17 F-44 6-63 6-98

Condensor #1046 --- F-18 F-45 6-59 6-96

4-3-3 Auto Shutter Speed Control

1) A light through the mounted lens and the half-mirrored area of the main mirror reflects on the metering mirror, and reaches the SPD (Silicon Photo Diode) located in the bottom of camera body. SPD changes the light energy into the current flow. The current flow is converted through the logaithmic time compression circuit into the voltage, which reacts to 18 mV per 1 LV. The brighter the light striking SPD, the greater the current flow.

   On the other hand, turning the ASA dial and the aperture coupling ring changes the resistance value of the FRE (Functional Resistor). The slower the film speed or the smaller the f-stop, the higher the output voltage of FRE.

2) In the computing of the output voltages from SPD and FRE, the output voltage for auto shutter speed control (V-AUTO) is adjusted, which reacts 36 mV per 1 EV. The brighter the light, the higher the film speed, or the larger the f-stop, the higher the V-AUTO. The maximum voltage is 2.8 V, and the minimum is 2.2 V. See Notice 1.

   Voltage[SPD] - Voltage[FRE] = Voltage for Auto-control

3) See Figure 16 , Timing chart for auto shutter speed control. Depressing the shutter release button closes Release SW and drops the voltage of Combination MG. Simultaneously, the signal for Analog SW flows to open Analog SW, and V-AUTO is held by Memory capacitor. See Notices 2 and 3. After this step, V-AUTO will not react to the changes in the light, film speed and f-stop.

4) As soon as Mirror is rising to the taking position, Shutter SW closes. And the current flows to Electromagnet for Closing curtain to absorb Armature #316. Thus, it holds Closing curtain open. At this moment, the terminal negative of Timing capacitor and the terminal positive of Comparator holds the voltage equal to Vcc2.

5) Turning Shutter curtain control #261 opens Trigger SW, and it puts the circuit of Delay-time in operation. See Notice 4. Thus, the signal of Trigger-OFF, after a delay of from 0.5 to 2.5 ms, flows to charge the Timing capacitor, and the voltage at the terminal positive of Comparator goes low. See Notice 5.

fig. 15 Auto shutter speed control circuit

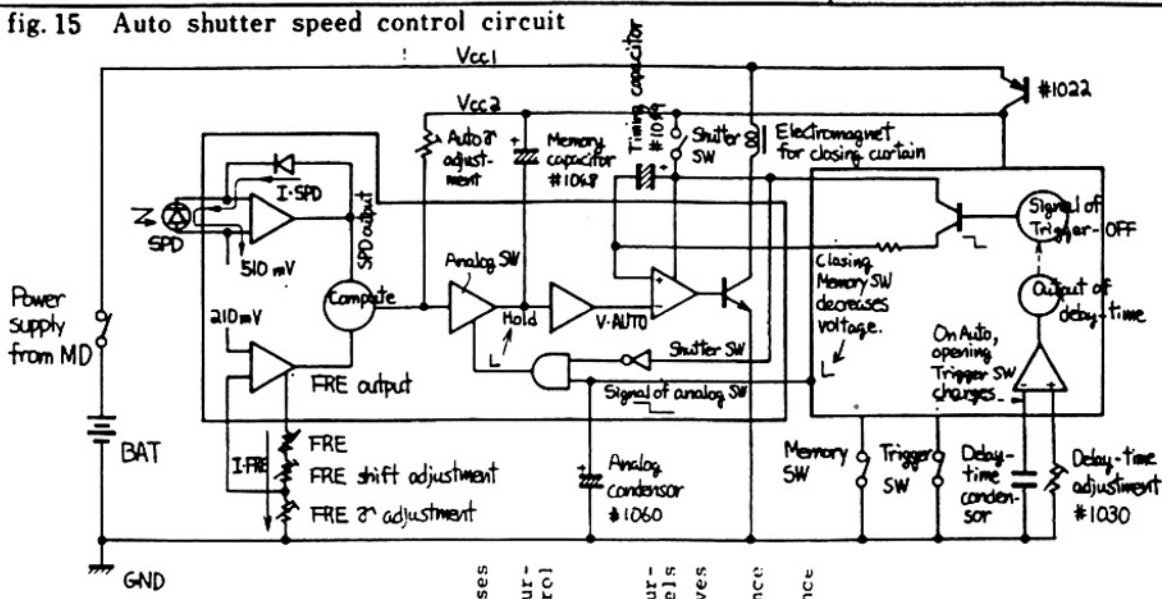

fig. 16 Timing chart of auto control circuit

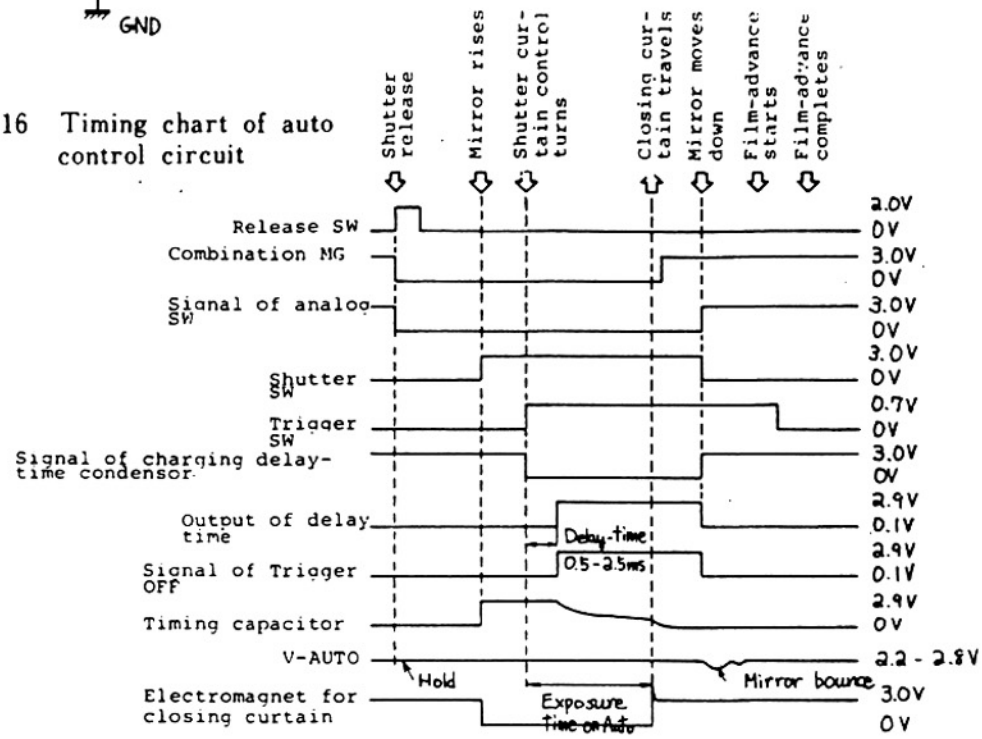

fig. 17 Exposure time on Auto

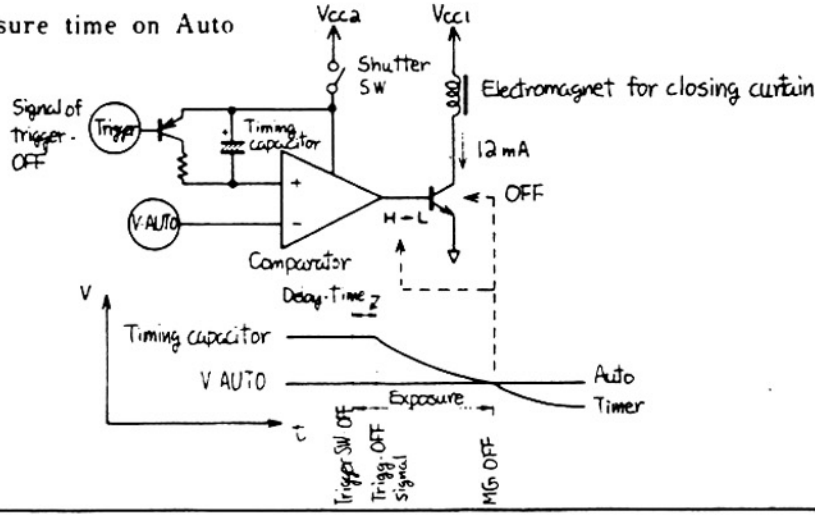

6) When the imput voltage goes lower than V-AUTO, the output voltage of Comparator also goes low to turn off the transistor, which supplies the current flow to Electromagnet for Closing curtain. So, Electromagnet loses magnetic power and frees Hook #292 to start the closing curtain travel.

7) After the exposure, Mirror moves down to open Shutter SW. And Analog SW closes. Thus, V-AUTO will react to the light, the f-stop and the film speed.

[Notice]

1 When measuring V-AUTO, read the value in reference to Vcc2. For instance, it reads from - 0.2 to -0.8V in reference to Vcc2. When using the ground as a reference, the voltage reading varies at the control of Electromagnet for Closing curtain.

2 Analog SW functions as Mirror SW of the FE.

3 V-AUTO is held high also when Memory SW closes.

4 Delay-time makes a balanced timing in the sequence of shutter release as below;
Trigger SW·OFF ⟶ Opening curtain's travel ⟶ Electromagnet for Closing curtain·OFF ⟶ Closing curtain's travel
The time from Trigger SW·OFF to Opening curtain's travel is longer than that of Electromagnet·OFF to Closing curtain's travel. In order to make a balance between them, Delay-time, which is from Trigger SW·OFF to Signal of Trigger SW·OFF, delays the closing curtain's travel. Note that Signal of Trigger SW·OFF functions as Trigger SW·OFF of the FE.

5 In the obserbation of wave form of V-AUTO in an oscilloscope, the shape of the wave form shakes after Shutter SW opens. It is caused by the shock of the mirror's bounce, which affects the light to SPD.

table 3 Checking lands in auto control circuit

Release SW ----------	F-6 F-32 F-125 6-10 6-51
Combination MG ----------	F-17 F-44 6-63 6-98
Signal of analog SW --------	F-77 F-79 F-83 F-99 F-127 6-74
Memory SW ----------	6-70
Shutter SW ----------	F-21 F-57 F-78 F-87 6-3 6-71
Trigger SW ----------	F-3 F-60 6-53 6-91
Signal of charging delay-time condensor -------	6-99
Output of delay-time -------	6-104
Signal of Trigger-OFF ------	Nil (Collector of the transistor is 6-6 and 6-90)
Timing capacitor ----------	F-81 F-103 6-5 6-87
V-AUTO ----------	F-23 F-55 F-97
FRE voltage ----------	F-85 F-102
SPD voltage ----------	F-117 4-27 4-36
Electromagnet for closing curtain ----------	F-1 F-51 F-96

table 5 Checking lands in manual control circuit

Release SW ----------	F-6 F-32 F-125 6-10 6-51
Combination MG ----------	F-17 F-44 6-63 6-98
Shutter SW ----------	F-21 F-57 F-78 F-87 6-3 6-71
Trigger SW ----------	F-3 F-60 6-53 6-91
Signal of charging delay-time condensor -------	6-99
Output of delay-time -------	6-104
Timing capacitor ----------	F-81 F-103 6-5 6-87
V-AUTO ----------	F-23 F-55 F-97
Gray cord V ----------	F-46 F-31 6-62 6-48 5-14
W ----------	F-50 F-30 6-61 6-43 5-9
X ----------	F-48 F-29 6-60 6-45 5-11
Y ----------	F-47 F-28 6-58 6-46 5-12
Z ----------	F-49 F-27 6-57 6-42 5-8
Electromagnet for closing curtain --	F-1 F-51 F-96

4-3-4 Manual Shutter Speed Control

1) Turning Shutter speed selector provides a shutter speed setting. Gray cord contact #224 comes in contact Gray cord board #1008 to input Gray cord in the circuit. See Notice 6.

2) In the manual shutter control, closing Shutter SW drops V-AUTO. At this moment, the voltage at the terminal negative of Timing capacitor goes high, and it follows the high output of Comparator. Thus, the transistor becomes ON to energize Electromagnet for Closing curtain. See Figure 20 .

3) However, at the shutter speed setting of 1/2000 sec., closing Shutter SW increases V-AUTO and the output of Comparator goes low to turn off the transistor. Thus, the current does not flow to Electromagnet.

4) Turning Shutter curtain control #261 opens Trigger SW. And the circuit starts to count the selected exposure time according to Gray Cord. See Notice 7.

5) After the counting is completed, the circuit provides the operation of Delay-time by charging Delay-time condensor.

6) After the lapse of Delay-time, which can be adjusted from 0.5 to 2.5 ms, the output of Delay-time increases V-AUTO promptly to the value of Vcc2. Then, Comparator drops the output voltage and the transistor becomes OFF. The current does not flow to Electromagnet, to release Closing curtain.

[Notice]

6 Gray cord is a kind of method to input a datum in the binary notation. This has a characteristic that a cord has only one particular element to the next cord. For example, Cord Z is the element which distinguishes the speed of 1/2000 sec. from 1/1000 sec.

7 The shutter speed is automatically controlled to 1/80 sec. when the settings of Auto or from 1/2000 to 1/125 sec. is selected in the use of the speed-light unit. However, when the settings from 1/60 to 8 sec., Bulb and Time, the shutter simply delivers an exposure of their own speeds.

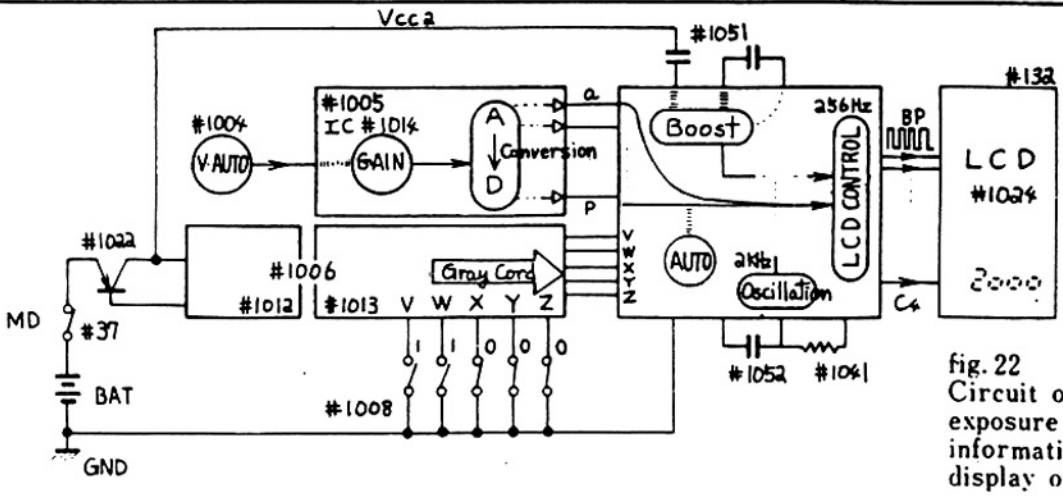

fig. 22
Circuit of exposure information display on Auto

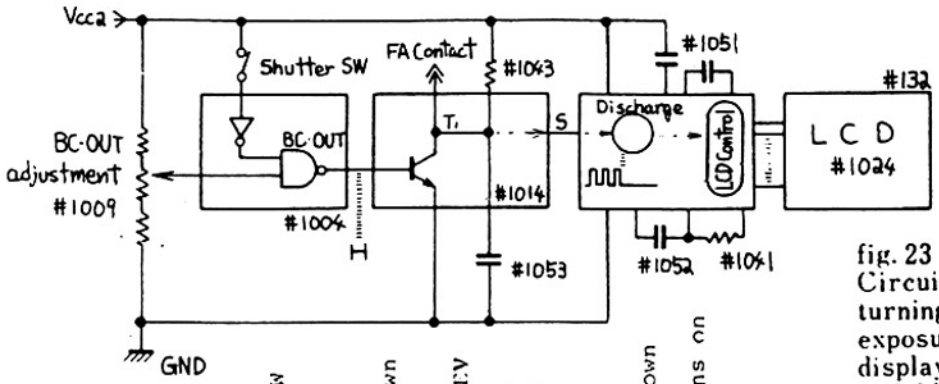

fig. 23
Circuit of turning off exposure information display on Auto and Manual

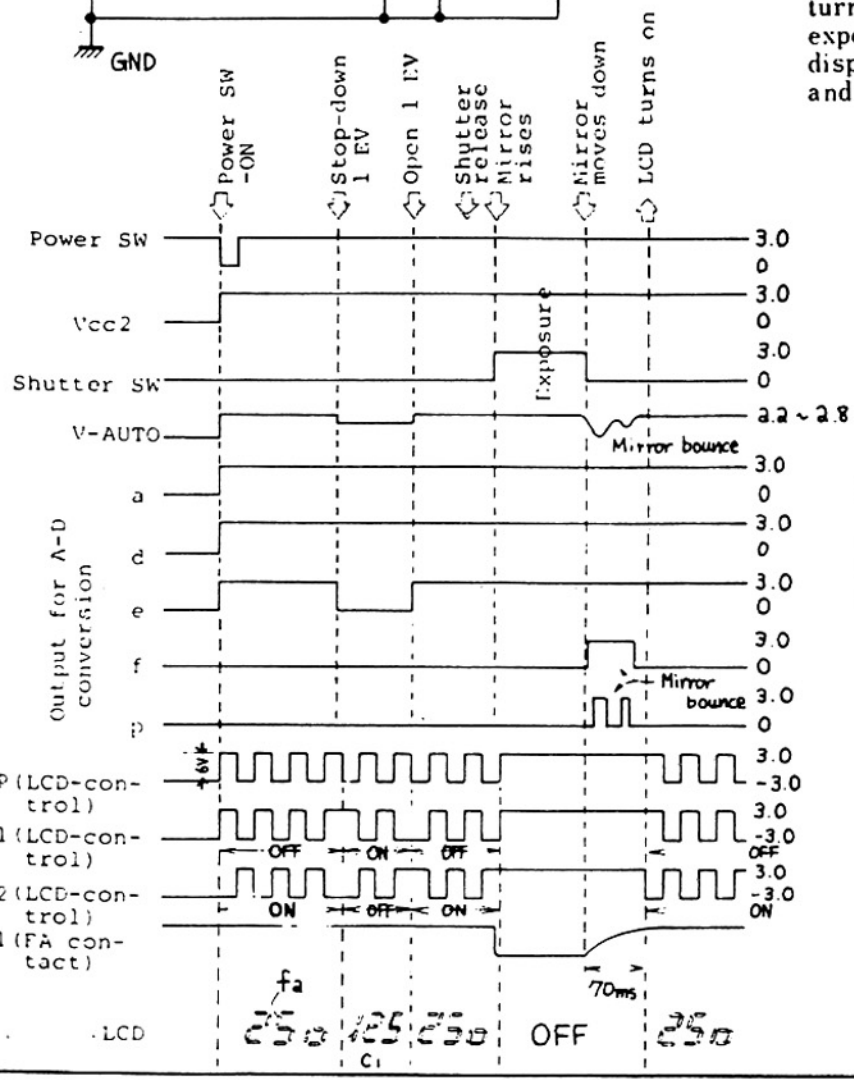

fig. 24
Timing chart of exposure information display on Auto

4-3-6 Exposure Information Display on Manual

1) Exposure information of the manual shutter speed settings is displayed in LCD by allowing the signals of Gray cord to input in the logic circuit for operaion of the circuit of LCD.

2) Mark of correct exposure "$\overset{-}{M}^{+}$" appears when the voltage of the selected shutter speed (COM) is equal to V-AUTO.

3) Turning the shutter speed selector moves the resistor brush on the patterns of Manual resistor #1007 to gain COM as an input, which reacts to 36 mV per 1 TV. See Notice 10.

4) On the other hand, V-AUTO and V-COM are computed as follows; it decides the information display of "$\overset{-}{M}$", "$\overset{-}{M}^{+}$" and "M^{+}".

V-AUTO - V-COM > 9mV → (q goes high, r goes low)

|V-AUTO - V-COM| ≦ 9mV → (q goes low, r goes low)

V-AUTO - V-COM < - 9mV q goes low, r goes high

q and r are the outputs of the two comparators which measure the level of difference between V-AUTO and V-COM. When q is low, LCD displays "$\overset{-}{M}$". When r is low, it does "M^{+}". In other words, when the difference between V-AUTO and V-COM is within ± 9mV , LCD displays "$\overset{-}{M}^{+}$". In case V-AUTO is lower than V-COM by more than 9mV it displays "$\overset{-}{M}$". In case V-AUTO is higher than V-COM by more than 9mV, it does "M^{+}".

[Notice]

8 The analog signal changes in sequence, however the digital signal does in discreteness.

9 LCD does not glow in itself. It needs the light which goes through its phase.

10 Manual γ adjustment decides the ameperage, which flows to Manual resistor, for providing V-COM of 36 mV/TV when V-AUTO is 36 mV/EV. Manual shift adjustment decides the level of V-COM so that the mark "$\overset{-}{M}^{+}$" can be displayed when the shutter speed setting of 1/250 on AUTO is direct changed into that of 1/250 on Manual.

table. 6 Checking lands in exposure information display on Auto

Power SW ----F-7 F-33 6-52

Vcc2 --------F-8 F-20 F-40 F-59 F-65 F-69
F-92 6-1 6-36 6-119 6-68 5-4
5-37 5-67 5-69

Shutter SW --F-21 F-57 F-78 F-97 6-3 6-71

V-AUTO-----F-23 F-55 F-97 5-19

Output of A-D conversion
a -----5-30
p -----5-31

T1------5-36 5-63

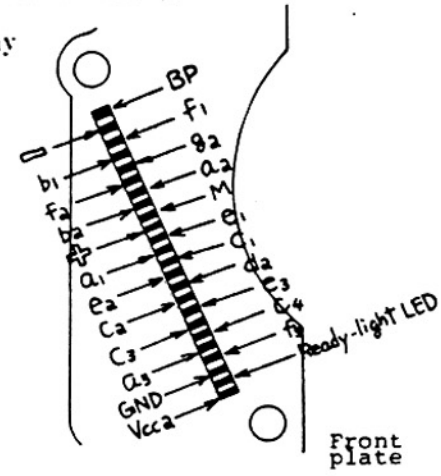

fig. 25 Checking lands in FPC3 #1003

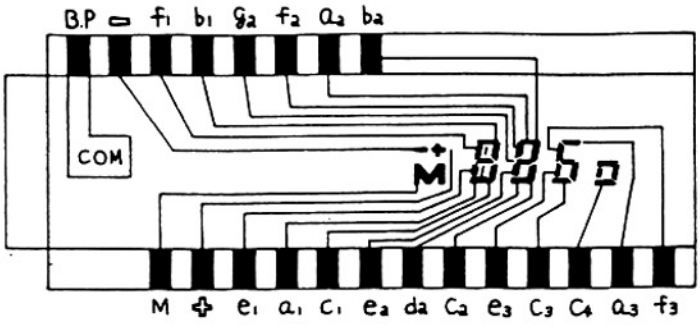

fig. 26 LCD #1024

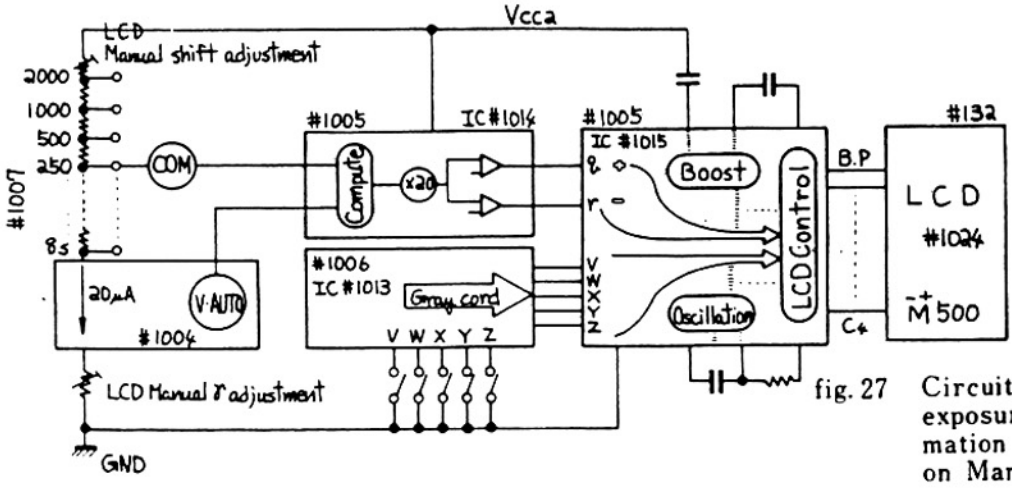

fig. 27 Circuit of exposure information display on Mannal

fig. 28 Timing chart of exposure information display on Manual

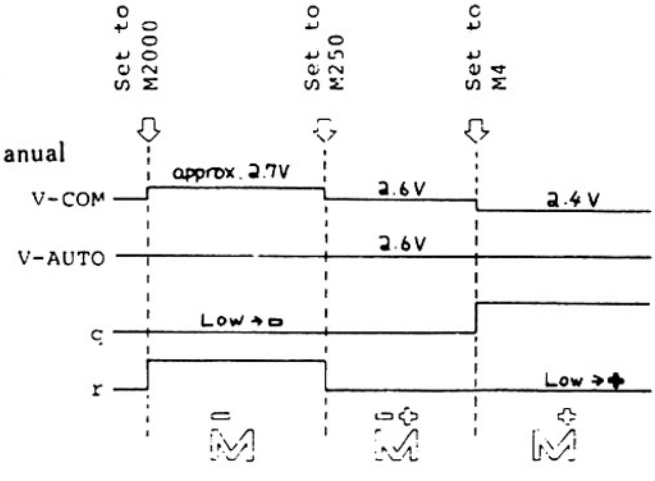

4-3-7 Connection with Motor Drive

1) When MD is mounted, Power supply connector 40FA97-#17 pushes up MD switch #37 and cancels the power supply from the batteries installed in the camera. Thus MD is ready to supply Vcc1 to the circuit of camera.

2) Depressing the trigger button of MD half-way closes Power SW of MD to turn on the transistor for power supply. Next, through #37, MD allows Vcc1 of camera to go high to approx. 3 V. Simultaneously, the signal of power-ON is provided with the circuit of camera, and Vcc2 goes also high as Power SW of camera is closed.

3) When Vcc2 reaches Vcc1, the signal of 16 sec.-holding is trasferred back to MD. So MD will continue to supply Vcc1 to the camera.

4) Next, depressing the trigger button of MD all the way closes Release SW of MD. The signal goes through #1034 to drop the voltage of shutter release circuit of camera as Release SW is closed. Accordingly, Shutter is released.

5) After the closing curtain's travel completes, Closing curtain SW closes to provide MD with the signal of film-advancing through Closing curtain SW and Film-advance completion SW. Then, with a delay (ON-delay) of approx. 22 ms , MD starts to work for film-advancing. See Notice 11.

6) As soon as the film-advancing is started, Film-advance completion SW closes and then Closing curtain SW opens. Completing the film-advancing, Film-advance completion SW opens. Now the voltages of both the SWs go high to provide a signal for stopping the operation of MD. At this moment, the film-advance mechanism of camera also blocks MD mechanically, and Ending SW closes to stop MD electrically in approx. 15 ms before a delay (OFF-delay) of approx. 18 ms.

7) In case the continuous setting of MD is in use, MD provides a signal for shutter releasing in approx. 15 ms after Film-advance completion SW opens. It functions after this step in the same manner as above.

[Notice]

11 If depressing the shutter release button, opened Closing curtain SW will not allow MD to start film-advancing before the release button is freed.

table. 7 Checking lands in exposure information on Manual

V-COM	F-24 F-39 5-7 6-41 6-56
V-AUTO	F-23 F-55 F-97
q	5-32
r	5-33
COM-1/2000	F-22 F-38 F-133
COM-8s	F-25 F-36 F-95
Gray cord V	F-31 F-46 6-62 5-14
W	F-30 F-50 6-61 5-9
X	F-29 F-48 6-60 5-11
Y	F-28 F-47 6-58 5-12
Z	F-27 F-49 6-57 5-8

fig. 29 Circuit of connection with MD

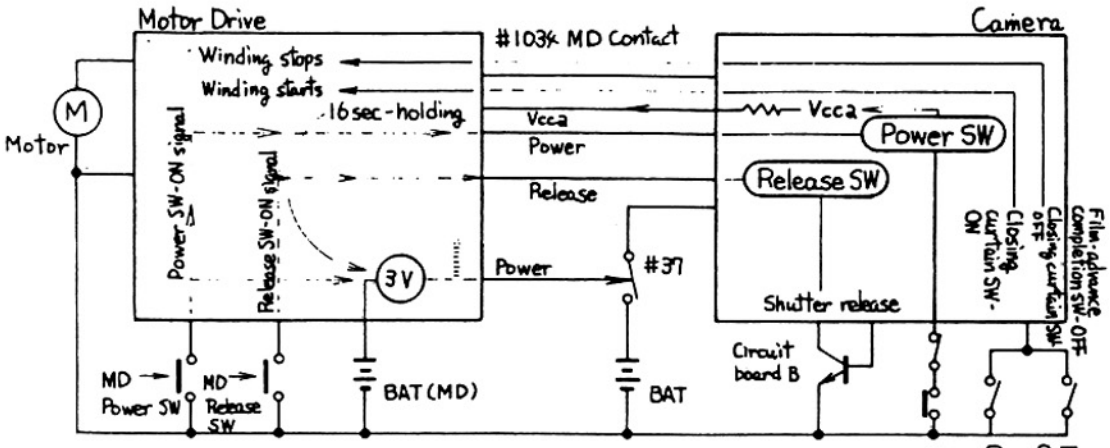

fig. 30 Timing chart of connection with MD

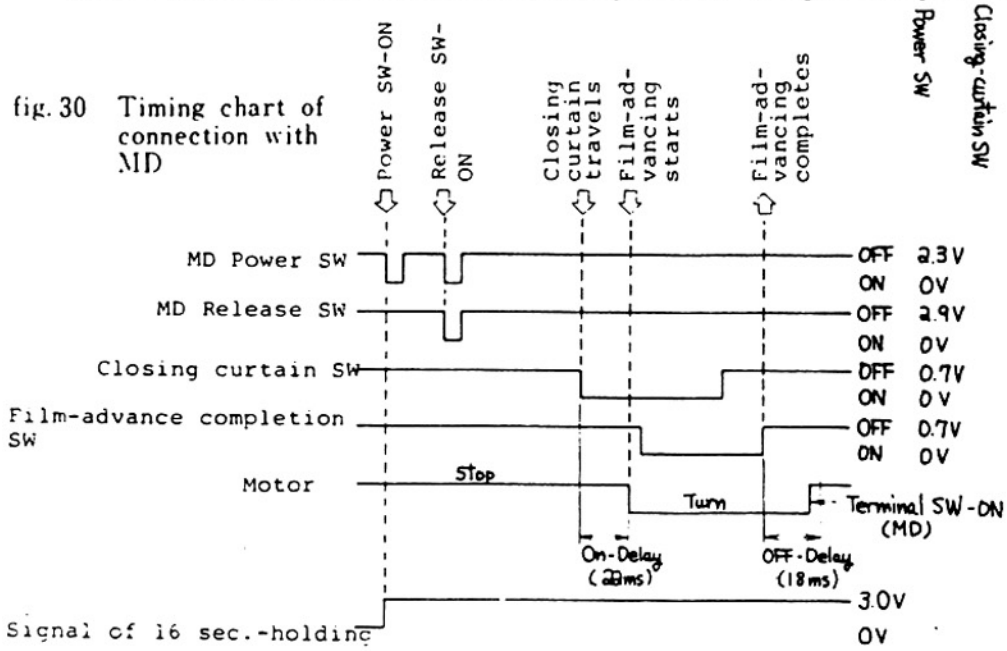

4-3-8 Self-timer

When Self-timer SW is closed, closed Shutter SW does not direct shut off Combination MG, and LED of self-timer starts blinking. For the first 8 seconds, it flashes 16 times with 2 Hz. But it blinks rapidly 16 times with 8 Hz during the last 2 seconds. Totally for 10 seconds the LED continues to glow. And then Combination MG opens to release Shutter.

In case Self-timer SW is turned off during LED's glowing, LED stops to work at once and setting of Self-timer operation will be canceled.

4-3-9 Frame-counter

Replacing the camera back onto the body closes Counter SW until Frame counter advances to "START". It automatically controls the shutter speed delivery as below;

On Auto ——————————→ 1/80 sec.
On Manual settings faster than 1/125 sec. ——→ 1/80 sec.
On Manual settings slower then 1/60 sec. ——→ same

When closing Counter SW, Terminal Ready-T goes high in the circuit.

4-3-10 Speed-light

Mounting the own speed-light unit as SB-12 allows the camera to control the sutter speeds in the same manner as Counter SW. Charging the speed-light supplies the current flow to the camera for lighting up of a ready light (LED) in the viewfinder. Light output control is automatically performed by the current flow from the circuit of camera, which is proportion to the light brightness.

4-3-11 Viewfinder Illuminator

Pressing the illuminator button makes a pressure onto Semiconductor #1028 to turn on FPC 3. And then Vcc2 is supplied to light up hte illuminator.

fig. 31
MD connector's terminals

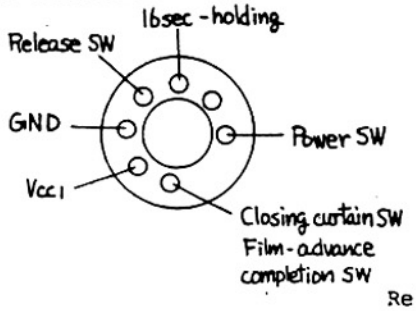

table 8 Checking lands in connection with MD

Vcc1 -----	F-2 F-15 F-61 F-122 6-50 6-110
Power SW ------	F-7 F-33 F-128 6-52
Release SW -----	F-6 F-32 F-125 6-10 6-51
Closing curtain SW ---	F-4 F-34 F-62 F-129 6-65
Film-advance completion SW	Signal of 16 sec.-holding --- F-126 6-64

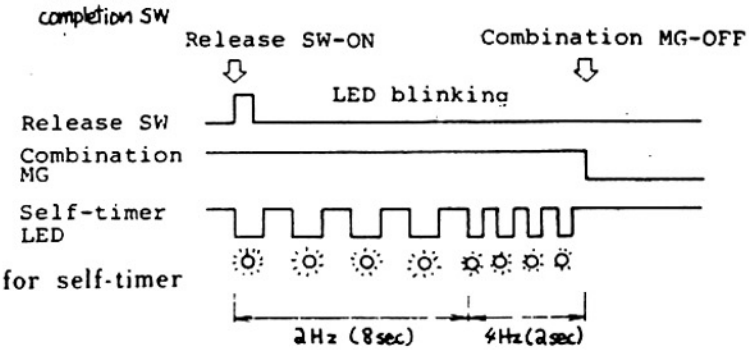

fig. 32 Timing chart for self-timer operation

fig. 33 Circuit of frame-counter and speed-light control

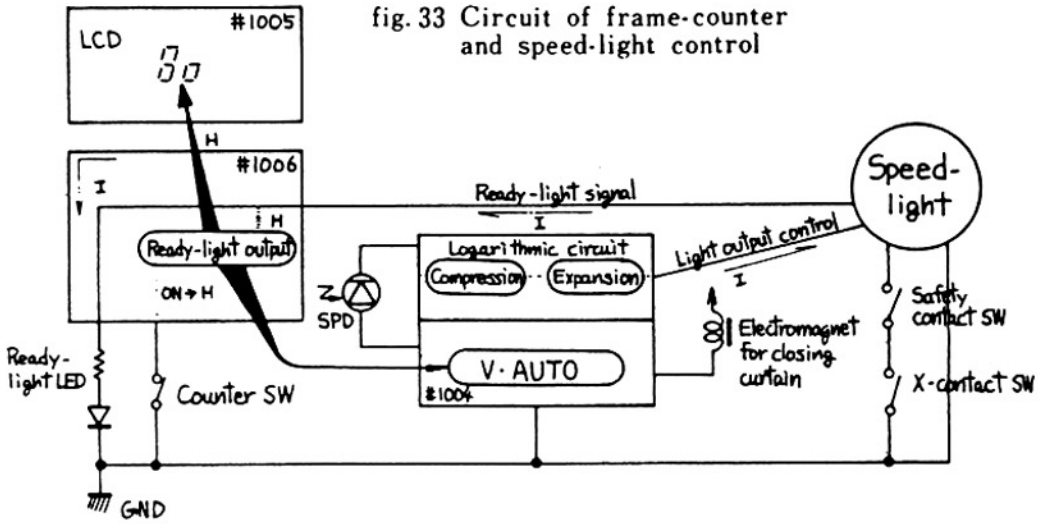

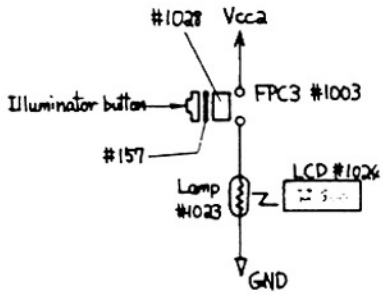

fig. 34 Illuminator for LCD

table. 9 Checking lands à la carte

Ready-light terminal -----	6-117 6-49 5-15
Counter SW -----	F-5 F-52 6-66
Light-output control signal -----	F-82 F-98 5-78
Self-timer LED -----	F-16 F-35 6-108
Self-timer SW -----	F-26 F-53 6-67
Ready-light LED -----	6-44 5-10 5-77 5-74

4-4 Troubleshooting Chart

4-4-1 Shutter fails to be released

1-0. Defects of the control circuit or those of other sections?

1-1. Batteries are OK? → Check batteries → (1)

1-2. Film-advancing is completed? → Stroke the film-advance lever → (2)

1-3. Power lock SW is turned on? → See the power lock SW knob → (3)

1-4. Self-timer is in use? → Depress the shutter release button to see the LED blinking → (4)

1-5. Extra-long time exposure in use? → Remove the lens to see the mirror locking up → (5)

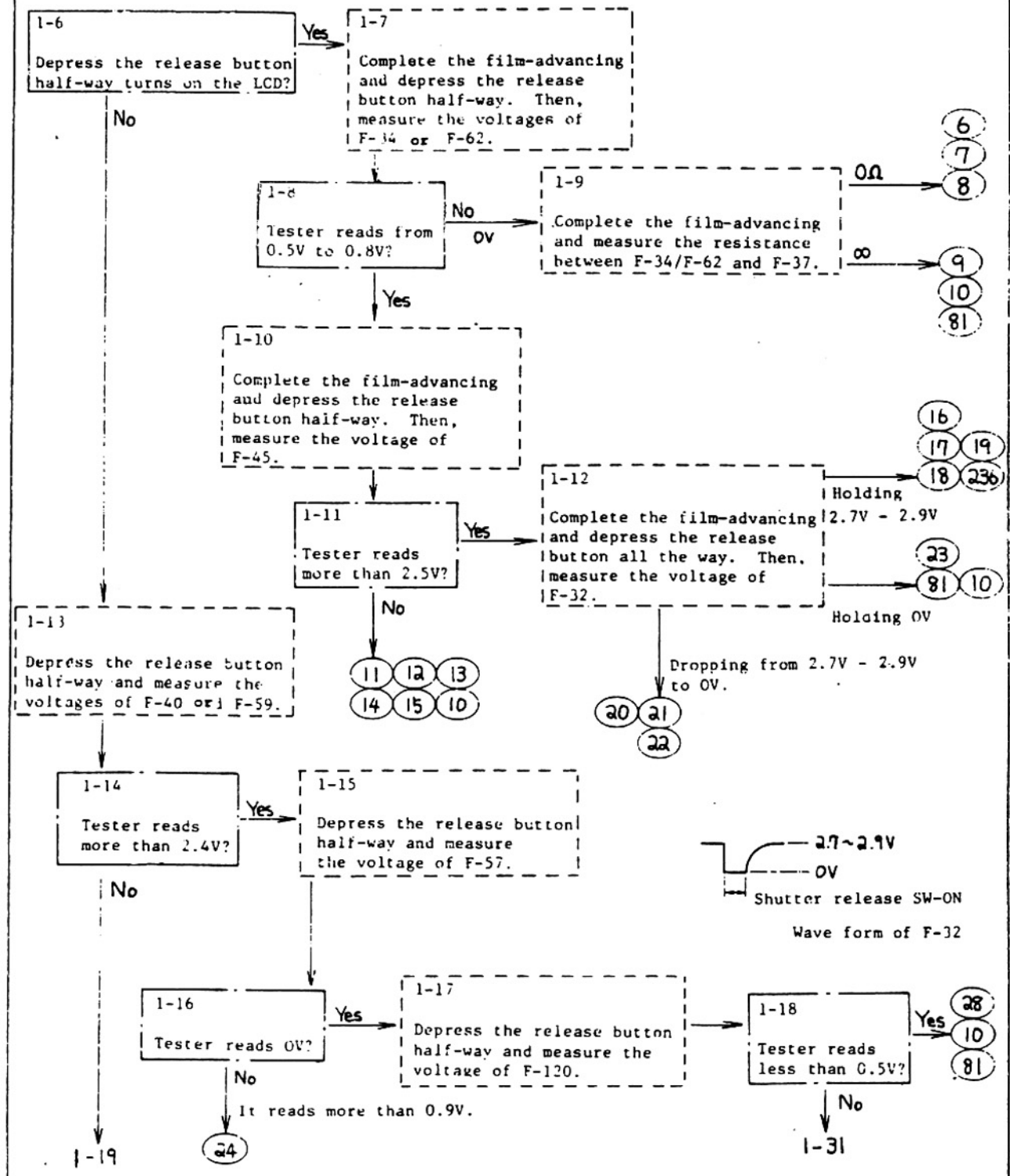

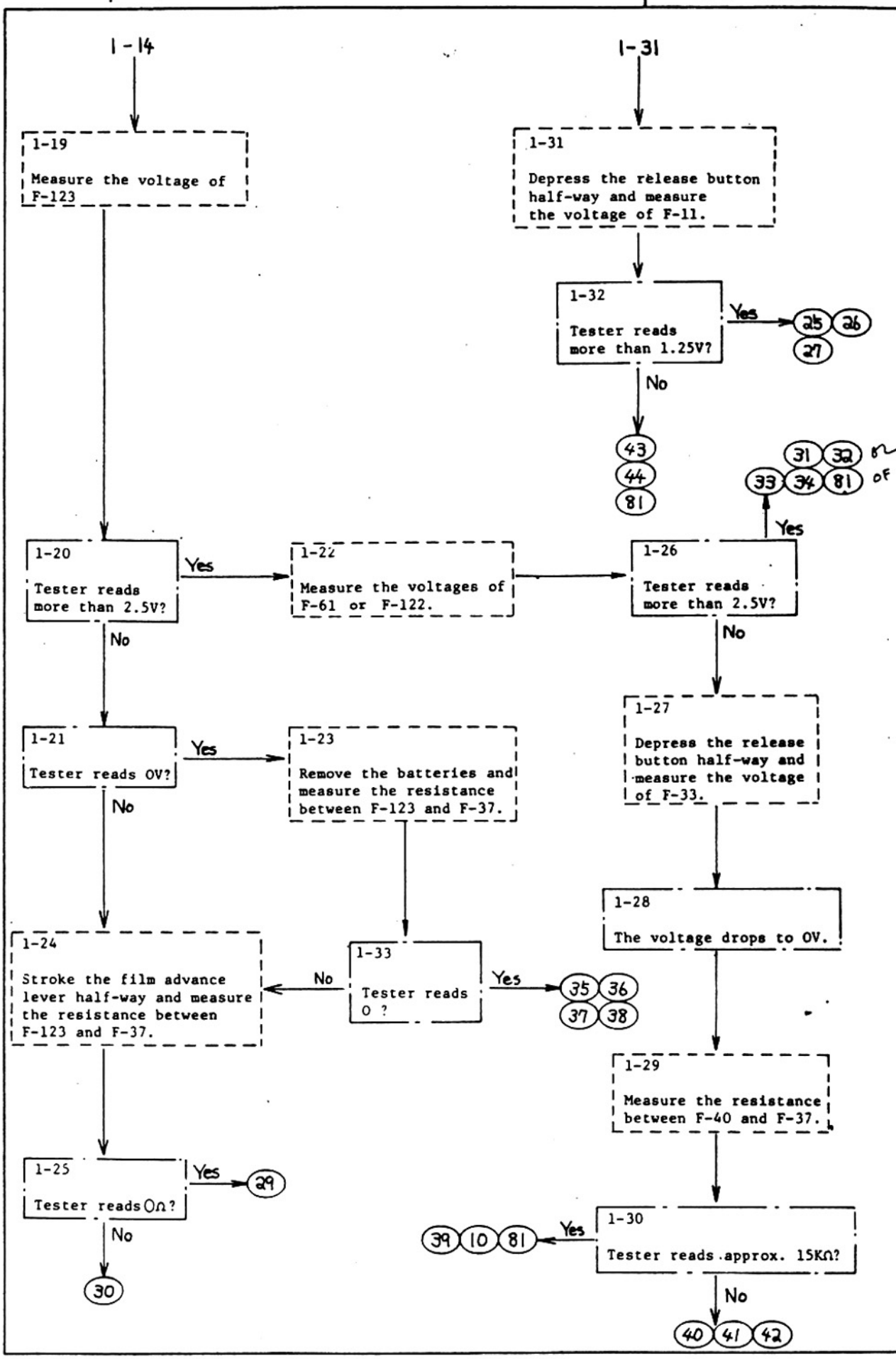
1-14
1-31
1-19
Measure the voltage of F-123
1-31
Depress the release button half-way and measure the voltage of F-11.
1-32
Tester reads more than 1.25V?
Yes
25 26 27
No
43 44 81
31 32 33 34 81
Yes
1-20
Tester reads more than 2.5V?
Yes
1-22
Measure the voltages of F-61 or F-122.
1-26
Tester reads more than 2.5V?
No
1-27
Depress the release button half-way and measure the voltage of F-33.
No
1-21
Tester reads 0V?
Yes
1-23
Remove the batteries and measure the resistance between F-123 and F-37.
No
1-28
The voltage drops to 0V.
1-24
Stroke the film advance lever half-way and measure the resistance between F-123 and F-37.
No
1-33
Tester reads 0 ?
Yes
35 36 37 38
1-29
Measure the resistance between F-40 and F-37.
1-25
Tester reads 0Ω?
Yes
29
No
30
1-30
Tester reads approx. 15KΩ?
Yes
39 10 81
No
40 41 42

4-4-2 Shutter provides only the Time operation

B = T reform switch contacts under release button to give greater separation - raise long bar, lower short

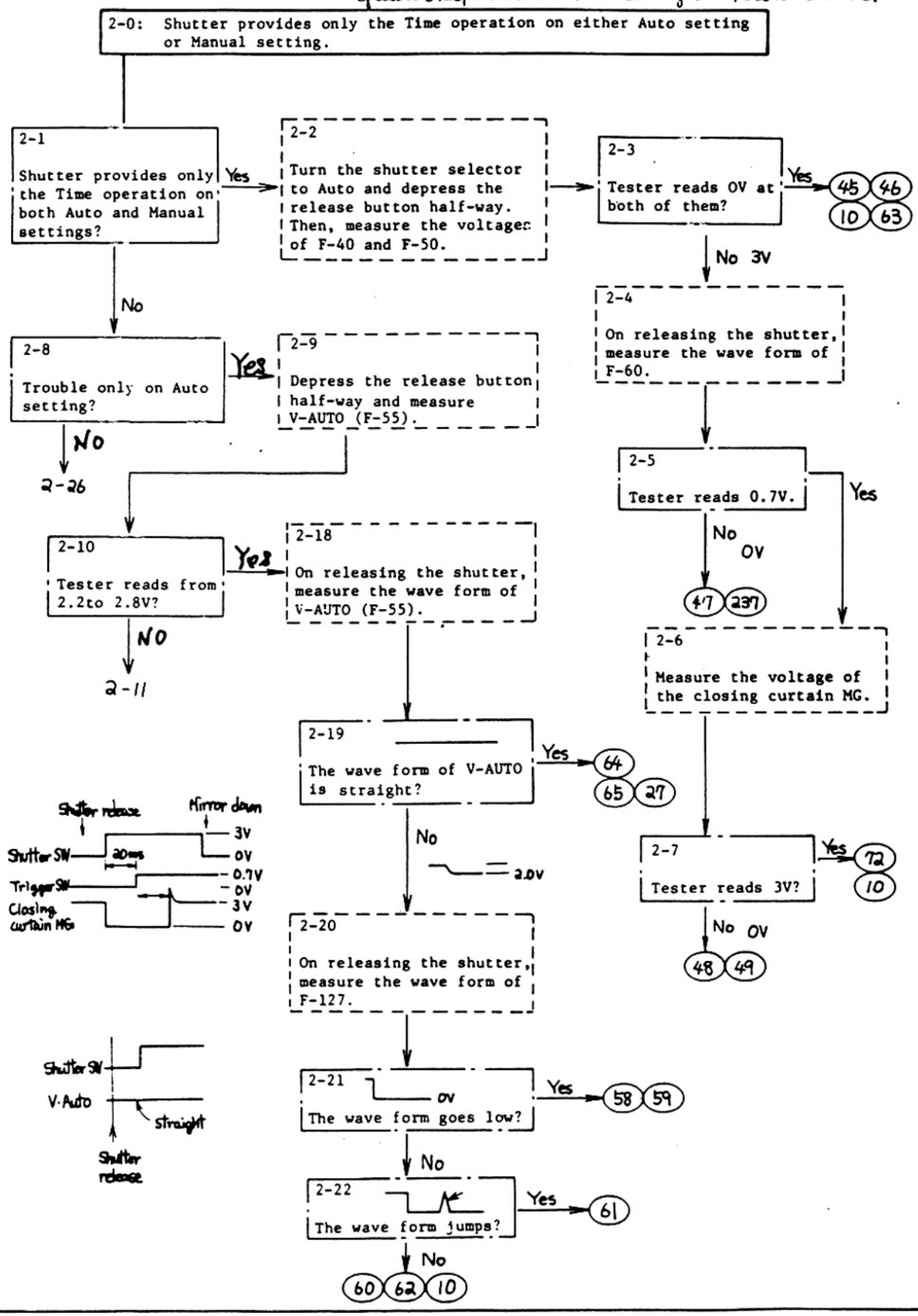

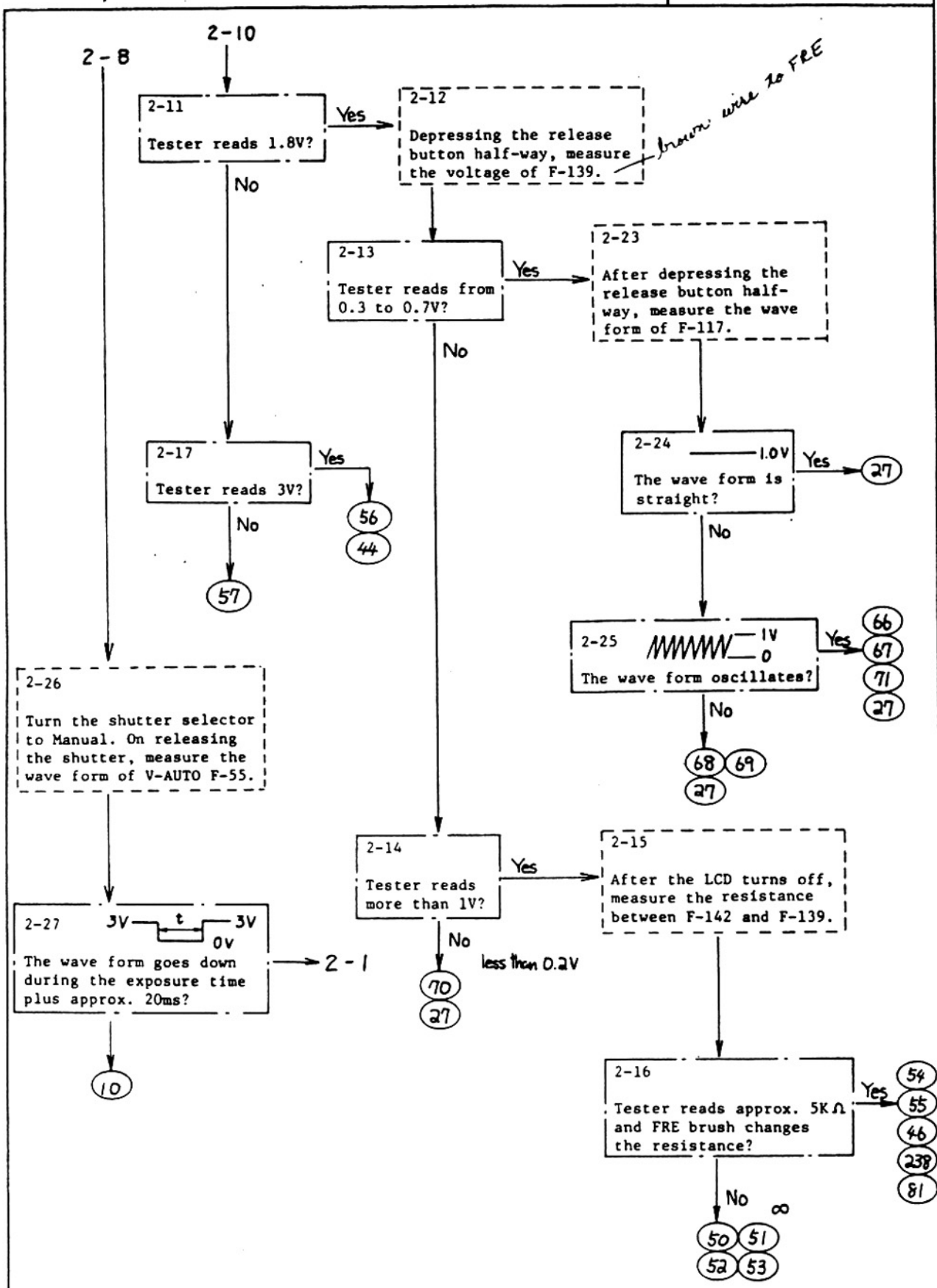
2-10
2-8
2-11
Tester reads 1.8V?
Yes
No
2-12
Depressing the release button half-way, measure the voltage of F-139.
brown wire to FRE
2-13
Tester reads from 0.3 to 0.7V?
Yes
No
2-23
After depressing the release button half-way, measure the wave form of F-117.
2-17
Tester reads 3V?
Yes
No
56
44
57
2-24
1.0V
The wave form is straight?
Yes
27
No
2-25
1V
0
The wave form oscillates?
Yes
66
67
71
27
No
68
69
27
2-26
Turn the shutter selector to Manual. On releasing the shutter, measure the wave form of V-AUTO F-55.
2-14
Tester reads more than 1V?
Yes
No
less than 0.2V
70
27
2-15
After the LCD turns off, measure the resistance between F-142 and F-139.
2-27
3V
t
3V
0V
The wave form goes down during the exposure time plus approx. 20ms?
2-1
10
2-16
Tester reads approx. 5KΩ and FRE brush changes the resistance?
Yes
54
55
46
238
81
No
∞
50
51
52
53

4-4-3 Shutter delivers only the speed of 1/2000 sec.

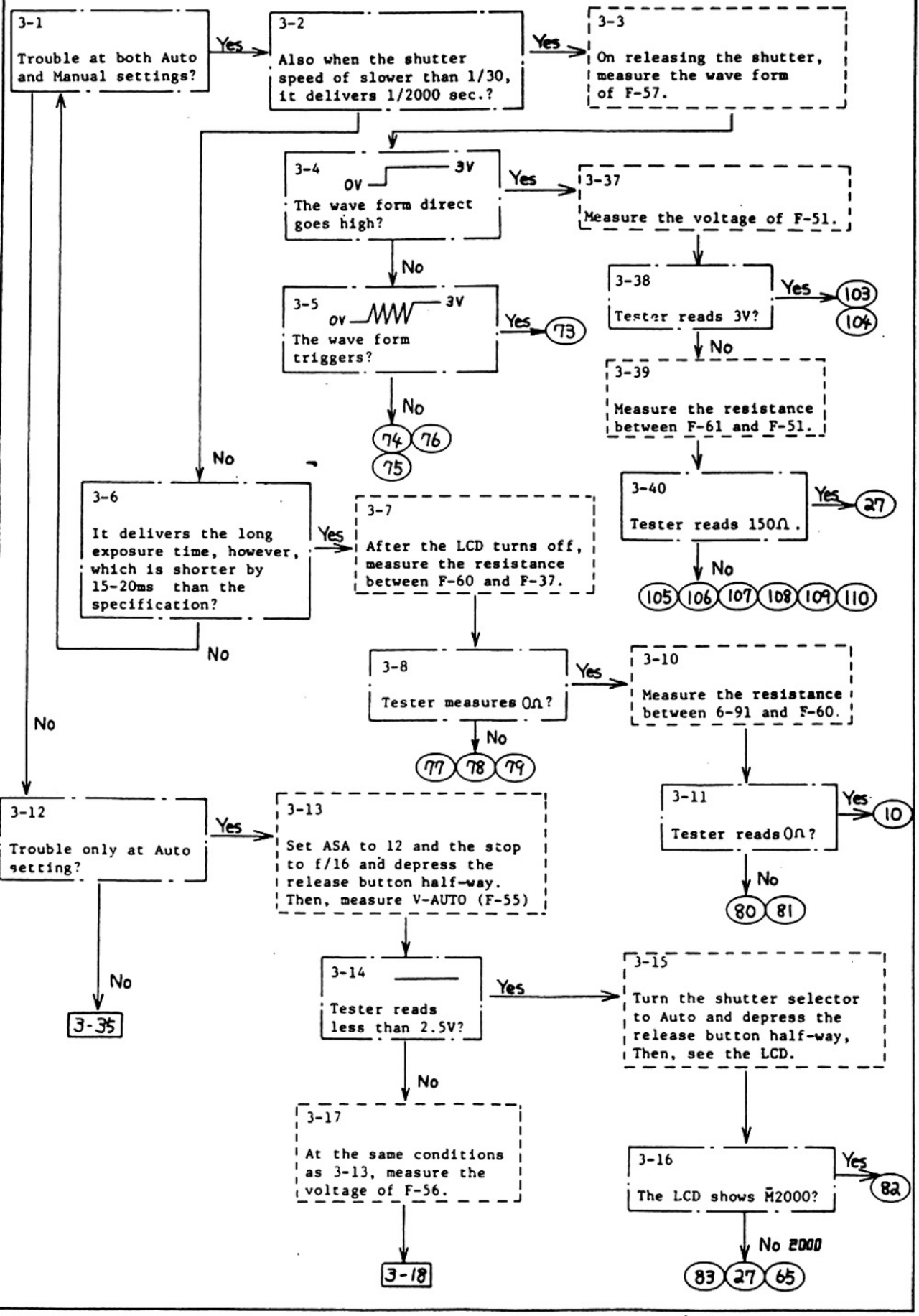

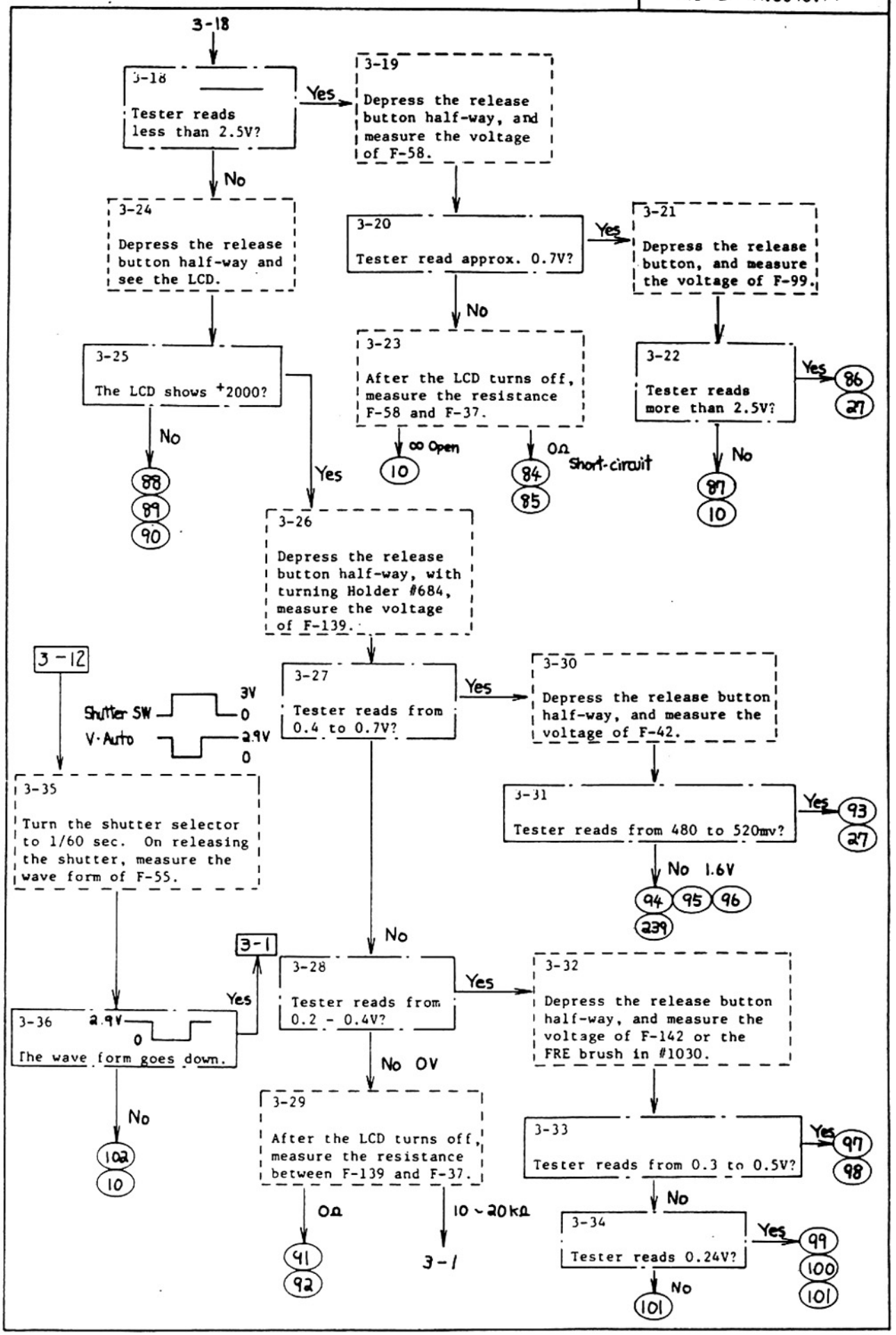
3-18
3-18
Tester reads less than 2.5V?
Yes
No
3-19
Depress the release button half-way, and measure the voltage of F-58.
3-24
Depress the release button half-way and see the LCD.
3-20
Tester read approx. 0.7V?
Yes
No
3-21
Depress the release button, and measure the voltage of F-99.
3-25
The LCD shows +2000?
No
Yes
3-23
After the LCD turns off, measure the resistance F-58 and F-37.
∞ Open
10
0Ω Short-circuit
84
85
3-22
Tester reads more than 2.5V?
Yes
86
27
No
87
10
88
89
90
3-26
Depress the release button half-way, with turning Holder #684, measure the voltage of F-139.
3-12
Shutter SW
V·Auto
3V
0
2.9V
0
3-27
Tester reads from 0.4 to 0.7V?
Yes
3-30
Depress the release button half-way, and measure the voltage of F-42.
3-35
Turn the shutter selector to 1/60 sec. On releasing the shutter, measure the wave form of F-55.
3-31
Tester reads from 480 to 520mv?
Yes
93
27
No 1.6V
94
95
96
239
No
3-1
3-28
Tester reads from 0.2 - 0.4V?
Yes
3-32
Depress the release button half-way, and measure the voltage of F-142 or the FRE brush in #1030.
3-36
2.9V
0
The wave form goes down.
Yes
No
102
10
No 0V
3-29
After the LCD turns off, measure the resistance between F-139 and F-37.
0Ω
10 ~ 20kΩ
91
92
3-1
3-33
Tester reads from 0.3 to 0.5V?
Yes
97
98
No
3-34
Tester reads 0.24V?
Yes
99
100
101
No
101

4-4-4 Shutter speed delivery is unstable on Auto.

4-1. The shutter speeds of slower than 1/50 sec. are somtimes delivered at 1/50 sec. → (61)

4-2. The shutter speeds of faster than 1/60 sec. deviate from specifications bv from 3 to 5 ms. → (73) (111) (112) (113) all 60+ → are 17ms

4-3. Under the low luminosity of less than LV4, the exposure time is shorter by more than approx. 1EV → (27)

4-4. The exposure time is longer or shorter by more than 1EV. → Make adjustments of each section in the following order;

1. B.C.OUT adjustment p.E10
2. Delay-time adjustment p.E11
3. Auto γ adjustment
4. FRE γ adjustment
5. FRE shift adjustment
6. LCD γ on AUTO adjustment
7. LCD shift on AUTO adjustment
8. LCD γ on Manual adjustment
9. LCD shift on Manual adjustment
10. Speed-light gain adjustment

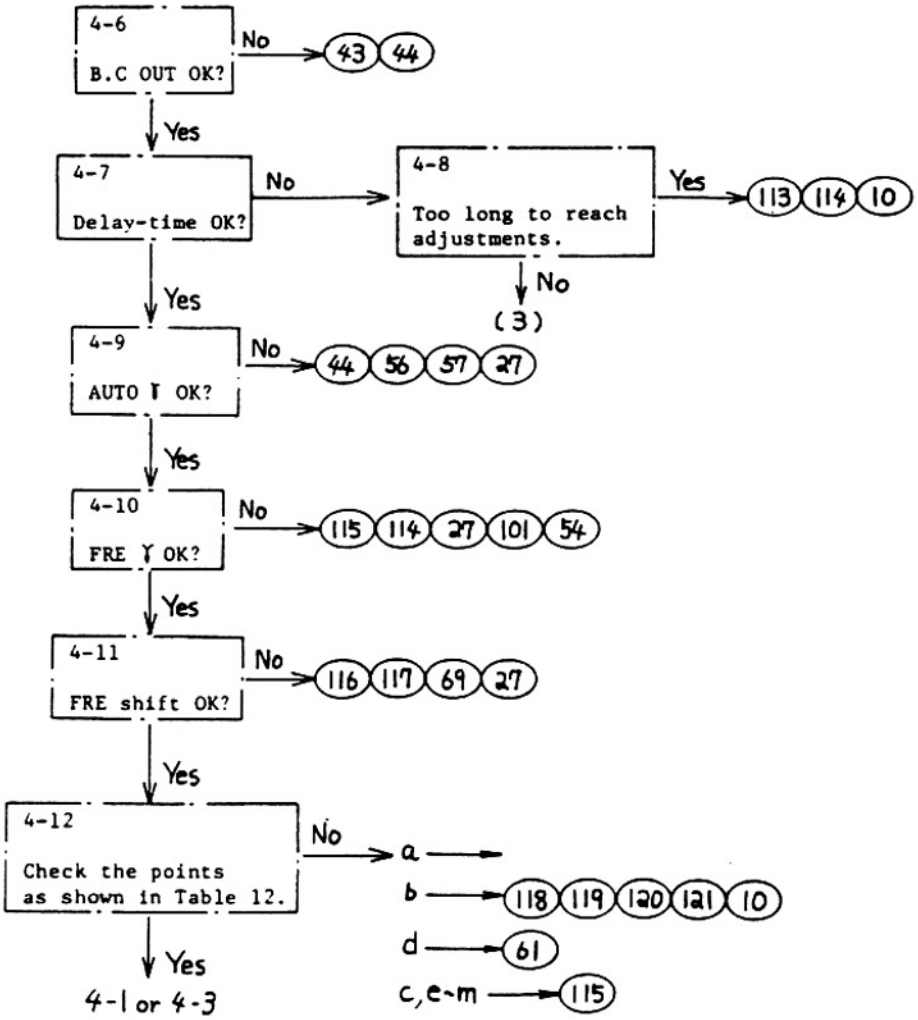

4-13. Under the low luminosity of less than LV4, the exposure time deviates from specification by approx. 0.5EV.→122

Table 12 Check points after FRE shift adjustment is made.

	Settings	Conditions	Shutter speeds
a.	Self-timer ON	LV9·f/11	210 - 300ms
b.	Self-timer OFF Memory lock ON	LV14·f/11	210 - 300ms
c.	Memory lock OFF	LV14·f/11	6.2 - 9.8ms
d.	Mirror locking-up		no deviations
e.	—	ASA1600·LV9·f/2	0.4 - 0.6ms
f.	—	ASA1600·LV9·f/4	1.6 - 2.5ms
g.	—	ASA100·LV9·f/5.6	52 - 74ms
h.	—	ASA25·LV9·f/8	420 - 600ms
i.	—	ASA12 (Correction +1) LV9·f/11	3.2 sec. - 5.0 sec.
j.	—	ASA100·LV4·f/2.8	420 - 600ms
k.	—	ASA100·LV9·f/2.8	13 - 19ms
l.	—	ASA100·LV14·f/2.8	0.4 - 0.6ms
m.	—	ASA400·LV14·f/2	0.4 - 0.6ms

4-4-5 Shutter speed delivery is unstable on Auto and Manual.

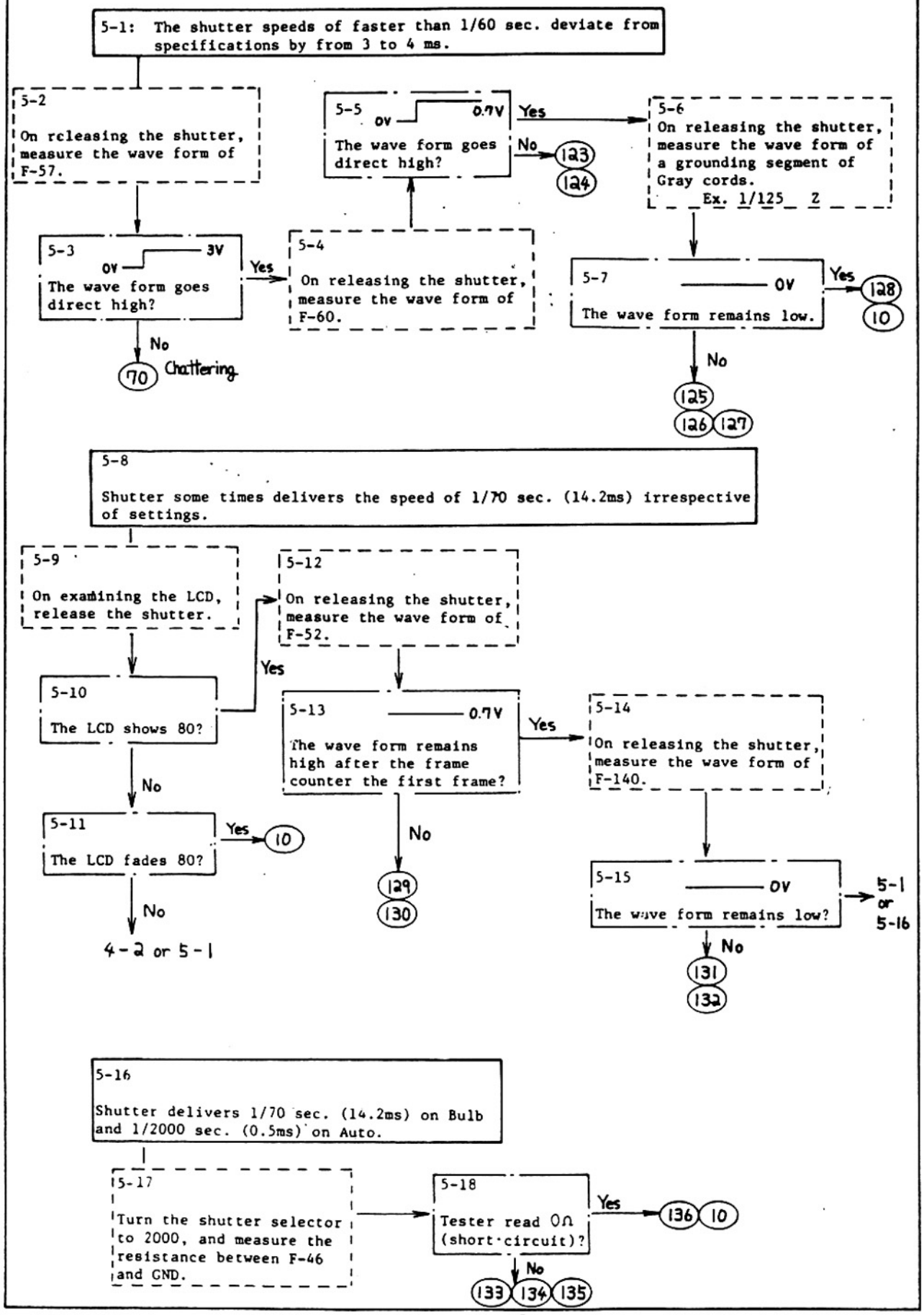

5-19

The shutter speeds of lower than 1/8 sec. becomes faster. (1/8 → 1/15, 1/4 → 1/30)

5-20

Turn the shutter selector to 8, and measure the resistance between F-50 and GND.

→ 5-21

Tester reads 0Ω (short·circuit)?

Yes → 140 10

No → 137 138 139

5-22

Shutter delivers 1/15 sec. on Auto and 2000, or on 1/30 sec. on 1000, 1/8 sec. on Bulb.

5-23

Turn the shutter selector to 2000, and measure the resistance between F-48 and GND.

→ 5-24

Tester reads 0Ω (short·circuit)?

Yes → 144 10

No → 141 142 143

5-28

Shutter delivers 1/1000 sec. on Auto and 2000, or 1/500 sec. on 250, 1/60 sec. on 1/125, 8 sec. on Bulb.

5-29

Turn the shutter selector to 2000, and measure the resistance between F-49 and GND.

→ 5-30

Tester reads 0Ω (short·circuit)?

Yes → 152 10

No → 149 150 151

5-25

Shutter delivers 1/250 sec. on Auto and 2000, or 1/500 sec. on 1000, 2 sec. on Bulb.

5-26

Turn the shutter selector to 2000, and measure the resistance between F-47 and GND.

→ 5-27

Tester reads 0Ω (short·circuit)?

Yes → 148 10

No → 145 146 147

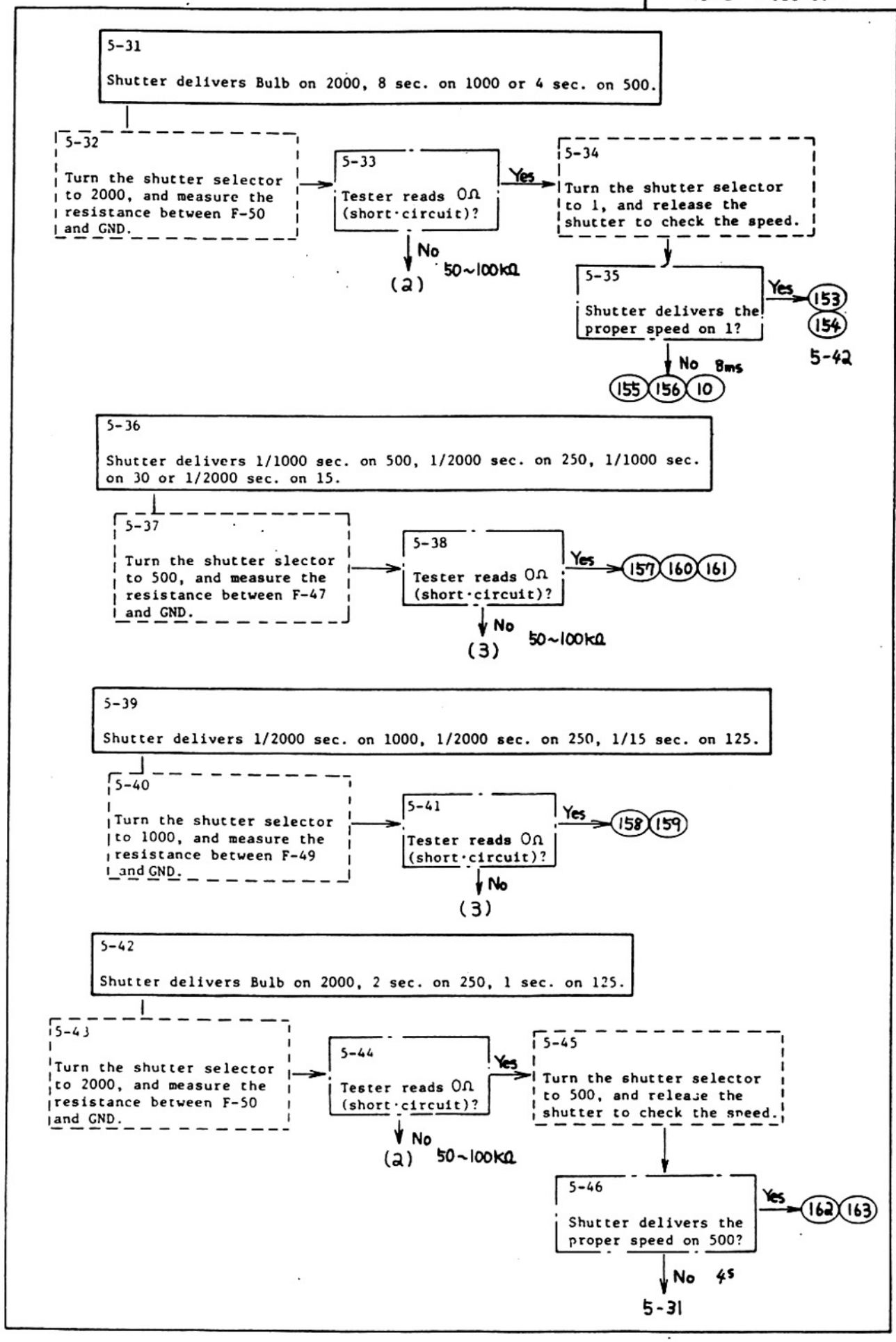
5-31
Shutter delivers Bulb on 2000, 8 sec. on 1000 or 4 sec. on 500.
5-32
Turn the shutter selector to 2000, and measure the resistance between F-50 and GND.
5-33
Tester reads 0Ω (short·circuit)?
Yes
No
50~100kΩ
(2)
5-34
Turn the shutter selector to 1, and release the shutter to check the speed.
5-35
Shutter delivers the proper speed on 1?
Yes
153
154
5-42
No
8ms
155
156
10
5-36
Shutter delivers 1/1000 sec. on 500, 1/2000 sec. on 250, 1/1000 sec. on 30 or 1/2000 sec. on 15.
5-37
Turn the shutter slector to 500, and measure the resistance between F-47 and GND.
5-38
Tester reads 0Ω (short·circuit)?
Yes
157
160
161
No
50~100kΩ
(3)
5-39
Shutter delivers 1/2000 sec. on 1000, 1/2000 sec. on 250, 1/15 sec. on 125.
5-40
Turn the shutter selector to 1000, and measure the resistance between F-49 and GND.
5-41
Tester reads 0Ω (short·circuit)?
Yes
158
159
No
(3)
5-42
Shutter delivers Bulb on 2000, 2 sec. on 250, 1 sec. on 125.
5-43
Turn the shutter selector to 2000, and measure the resistance between F-50 and GND.
5-44
Tester reads 0Ω (short·circuit)?
Yes
No
50~100kΩ
(2)
5-45
Turn the shutter selector to 500, and release the shutter to check the speed.
5-46
Shutter delivers the proper speed on 500?
Yes
162
163
No
4s
5-31

4-4-6 LCD will not change +2000.

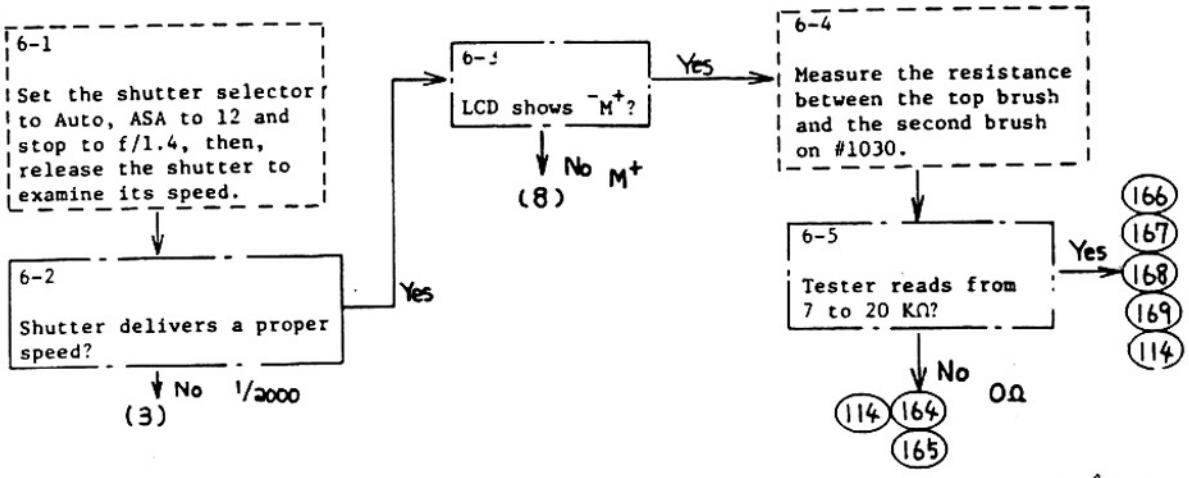

4-4-7 LCD will not change -8.- check brown wire to FRE

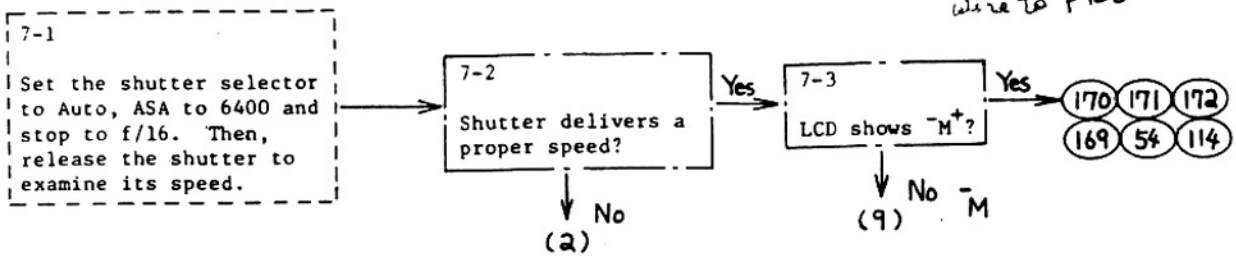

4-4-8 LCD will not change M+

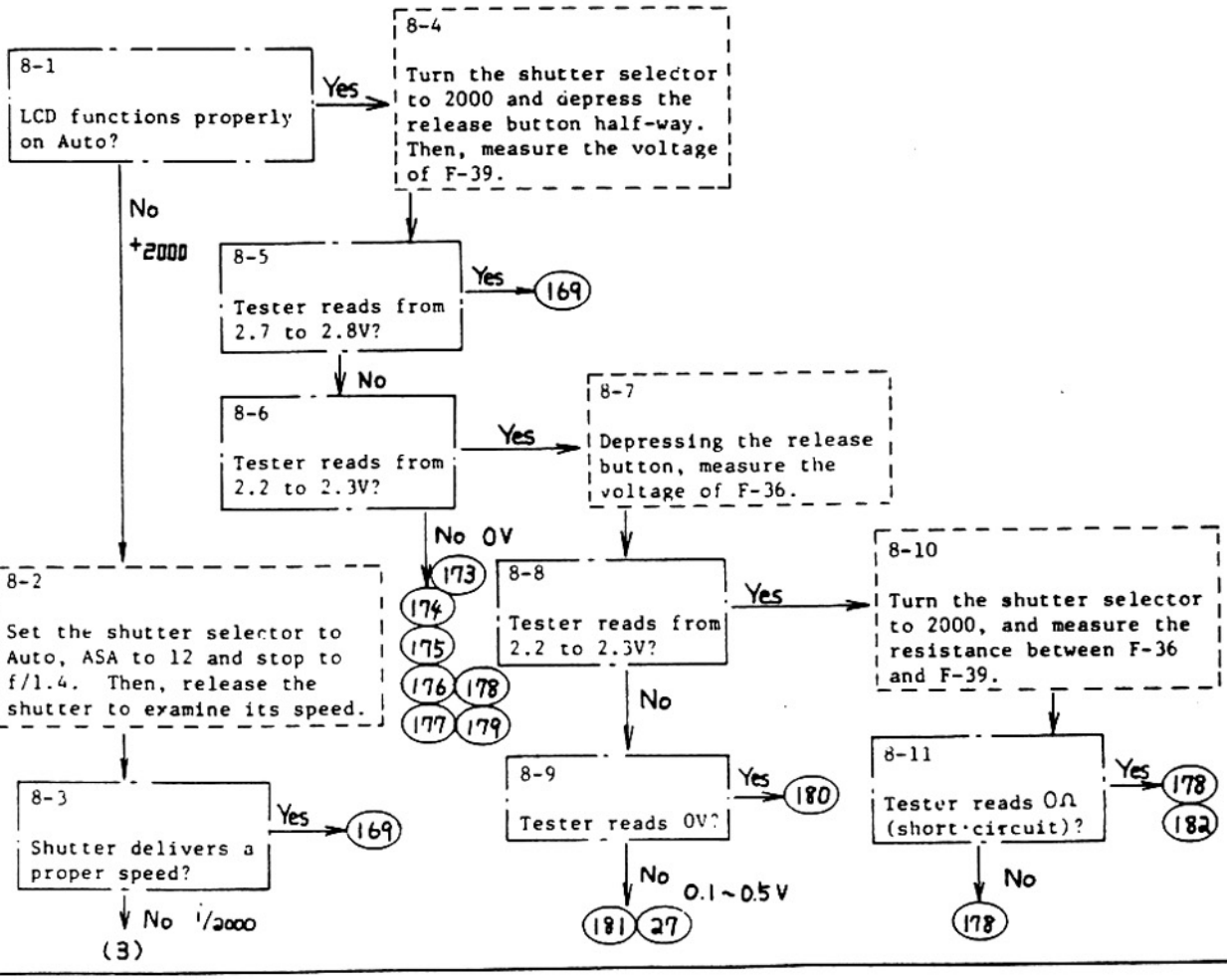

4-4-9 LCD will not change -M.

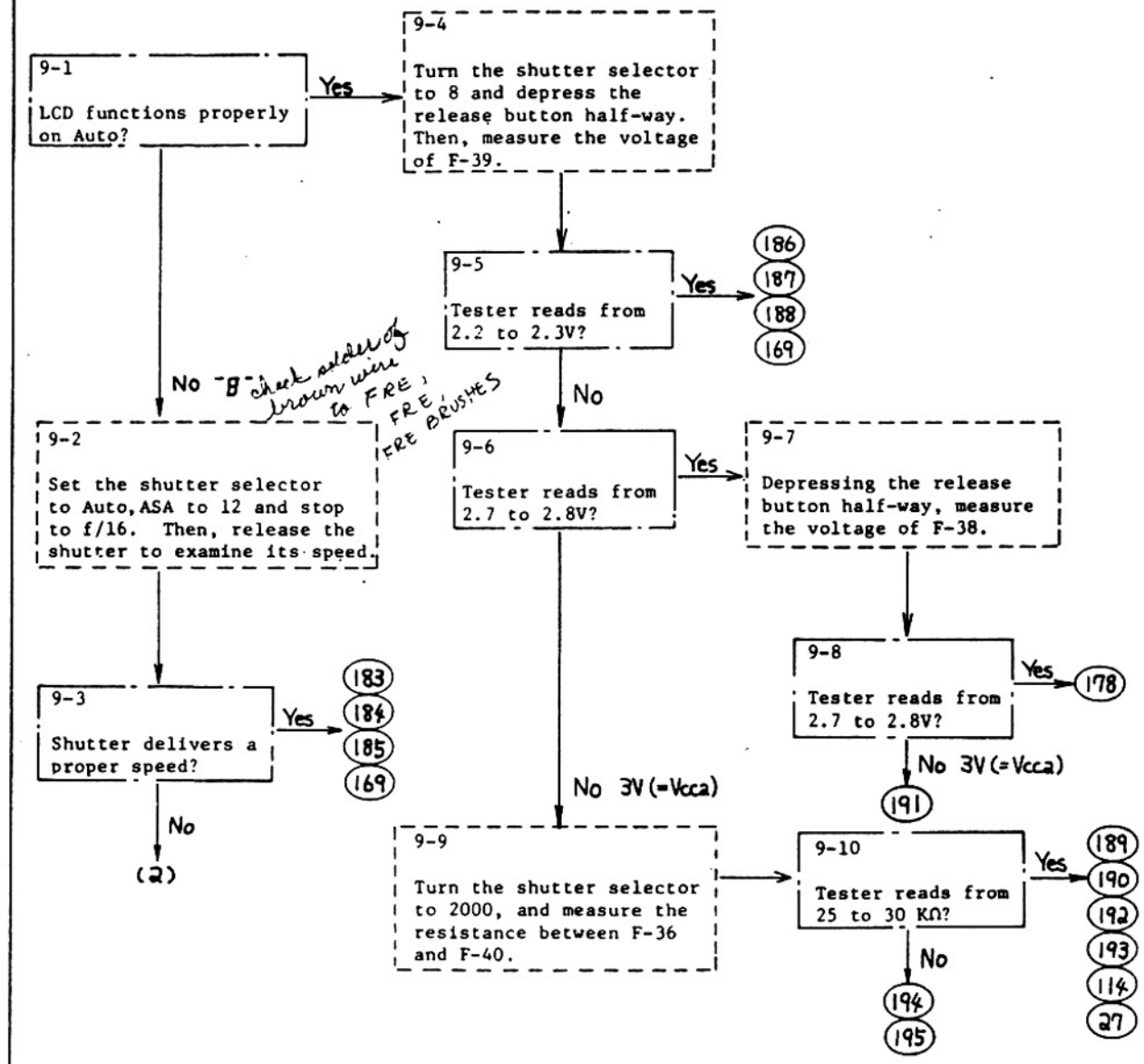

4-4-10 Troubles of LCD

10-1
LCD will not turn on.

10-2
Shutter will be released?
- Yes → 10-3
- No → (1)

check for crud or corrosion on FRE

10-3
Depress the release button and measure the voltage of soldering of #1080.

orange wire under FRE

10-4
Tester reads 3V?
- Yes → 169 198
- No → 199 200 201 169 240

10-5
LCD will not turn off during the exposure.

10-6
Turn the shutter selector to 1, and release the shutter to examine its speed.

10-7
Shutter delivers 1 sec.?
- Yes → 10-8
- No → 74

10-8
LCD functions properly on Auto?
- Yes → 196 197
- No → 207 208

10-9
All the LCD segments will turn on improperly.

10-10
Depressing the release button, measure the wave form of BP.

10-11
The wave form triggers frequently?
- Yes → 203 204 205
- No → 202

10-12
One of the LCD segments is fading.

10-13
Depressing the release button, measure the wave form of the faded segment.

10-14
The wave form triggers frequently?
- Yes → 203 204 205
- No → 206

10-15

LCD shows $^{-}M^{+}$ also on Auto. → 207 208

10-16

LCD shows M^{-} on X. → 207 208

10-17

2000 looks like 2800 . → 209 210

10-18

LCD shows $^{-}M^{+}$2800 on Auto. → 211 212

10-19

Lightening the illuminator changes the LCD to higher speed by 1EV. → 213

10-20

LCD will not turn off.

10-21

Measure the resistance between F-33 and F-37. → 10-22

10-22

Tester reads 0Ω (short circuit)?

Yes → 242 243

No → 241 10

10-23

Mark of $^{-}M^{+}$ will not turn off with the change of more than 0.5EV. → 244 169

4-4-11 Troubles of Self-timer

11-1
With the self-time used, the exposure time on Auto will be short by 0.3EV. → 214

11-2
Closing the self-timer SW will not allow the self-timer to work.

11-3
Close the self-timer SW and depress the release button half-way. Then, measure the voltage of F-53. →

11-4
Tester reads 0V?
- Yes → 218 10
- No 3V → 215 216 217

11-5
Opening the self-timer SW will allow the self-timer.

11-6
Turn the shutter selector to 60 and see if the self-timer SW opens. Then, depress the release button. →

11-7
The self-timer works?
- Yes → 11-8
- No → 219 178

11-8
The frame-counter reaches the first frame?
- Yes → 10
- No → 220

11-9
With the self-time used, the LED will not blink.

11-10
Close the self-timer SW and depress the release button. Then, measure the wave form of F-35. →

11-11
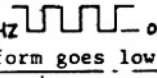

The wave form goes low?
- Yes → 226
- No ↓

11-12
The wave form remains high?
- Yes → 10 224 225
- No → 221 223 222

11-13
The LED will continue to blink.

11-14
Releasing the shutter turns off the LED?
- Yes → 228 10
- No → 227 229

NO FLASH IS OFTEN POOR SOLDER ON GREY WIRE ON BOTTOM

4-4-12 Troubles of speed-light

12-1. The ready-light LED will continue to blink.

12-2. The speed-light doubles its flash in longer exposure time.

12-3. The ready-light LED will not turn on.

4-5 Causes

1. Batteries are dead.
2. Film-advancing is not completed.
3. Power lock SW opens.
4. Self-timer SW closes.
5. Exposure is in operation.

! 6. Clearance between contacts of Film-advance completion SW is not enough for opening after the film-advancing is completed.

7. Closing curtain SW remains closed.
8. Soldering bridge over F-4 and F-3 on #312 of #1001. See Figure 31.
9. Separation of 6-65 at the solder joint between #1001 and #1006. FPC
10. Defective #1006. FPC CERAMIC BW SIDE, FRONT

! 11. Breakage of land of Combination magnet on #1001. See Figure 30. FPC

12. Poor solder joint of #1046 (F-63 and F-64) FPC
13. Reversely installed #1046. Change its polarities (F-13 is positive).

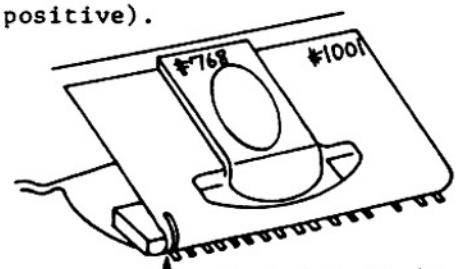

fig.30 Land of Combination magnet

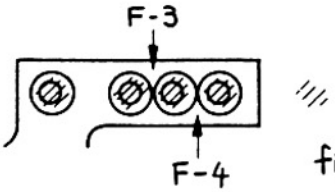

fig.31

14. Defective #1046
15. Film-advance completion SW remains opened. P.A6
16. Breakage or poor solder joint of #1084 (F-6)
17. Breakage of poor solder joint of #1085
18. Poor contact of Power lock SW
19. Poor contact between #333 and #244
20. Incorrect wiring between #199 and #1001. Use black lead wire for F-17 and red one for F-18.
21. Defective #199
22. Defective assembly unit of #199. Shutter clicks, but not to be released.
23. Separation of 6-51 at the solder joint between #1001 and #1006.
24. Shutter SW remains closed. P.M13 YELLOW + ORANGE WIRES WIND SIDE FRONT
25. Short-circuit between the foot of #1096 and the pin of #1004 (F-105) due to the breakage of #1097.

26. Poor solder joint of pin of BC·OUT (F-106) on #1004.
27. Defective #1004
28. Separation of land of BC·OUT (6-80) at the solder joint between #1001 and #1006.
29. Short-circuit between land of BAT battery + and that of Film-advance completion SW at the solder joint of #1034 with #1001.
30. Batteries are dead.
!! 31. Breakage of #37 MD SWITCH
32. Poor contact between #37 and #1034 — CHECK FOR CONTINUITY BETWEEN F 122 PIN + F 123 BAT +
33. Poor solder joint of #37 with #1001 (F-122) PIN.
34. Poor solder joint of land of BAT between #1001 and #1034
35. Breakage of #1061. It causes short-circuit with the body die-casting.
! 36. Solder joint (F-122) between #37 and #10C1 short-circuits with #200.
37. F-2 short-circuits with F-3 at the solder joint between #1001 and #312. See Figure
38. Black lead wire from Closing curtain electromgnet short-circuits with a mechanical part.
39. Separation of 6-52 at the solder joint between #1001 and #1006.
40. F-92 short-circuits with F-91 at the solder joint between #1001 and #1004.
41. 6-68 short-circuits with 6-69 at the solder joint between #1001 and #1006.
42. F-92 short-circuits with F-91 at the solder joint of #1089 with #1003.
! 43. Poor solder joint of #1009 (F-8 and F-11)
44. Defective #1009
45. Short-circuit between Gray cords (from F-22 to F-31)
46. Circuit-pattern of #1006 short-circuits with the body die-casting.
47. Trigger SW remains closed.
48. Black lead wire from Closing curtain electromagnet short-circuits with a mechanical part.
49. The foot negative of #1059 short-circuits with a mechanical part.
!! 50. Breakage of #1078 ← BROWN LEAD WIRE 7.0 FRE BREAK
51. Floating of #701
52. Floating of #702 and #703

53. Floating of #706
54. Poor solder joint of #1030
55. Separation of 6-81 at the solder joint between #1001 and #1006.
! 56. Poor solder joint of #1009 (F-9 and F-10)
57. Poor solder joint of #1009 (F-8)
58. Poor solder joint of #1048 (F-69 and F-70)
59. Defective #1048
60. F-126 short-circuits with F-127 at the solder joint between #1034 and #1001.
!! 61. Insufficient contact pressure of Shutter SW causes chattering due to the firing of opening curtain. p.M13
62. F-99 short-circuits with the next land on #1004.
63. #245 is not being hooked to #231.
64. F-103 short-circuits with on #1004.
65. Defective #1049
66. Poor solder joint of #1050 on #1090.
67. Breakage of #1074 on #1090.
68. Poor solder joint of #1019 or reversely installed #1019 on #1004. Change its polarities (Cathode is placed to F-114).
69. Poor solder joint of #1029 or defective #1029 on #1004.
70. Poor solder joint of F-102 on #1004.
71. Poor solder joint of #1053 on #1006. Notice that the trouble of Time-operation causes when the voltage of batteries drops. (6-85 and 6-86)
72. Land 6-5 short-circuits with 6-6 at the solder joint of #1037 on #1006.
! 73. Insufficient contact pressure of Shutter SW
74. Defective Shutter SW. Notice that the switch remains defectively opened when Mirror rising to the taking position.
75. Breakage or poor solder joint of #1081
76. Breakage or poor solder joint of #1082
77. Defective Trigger SW. Notice that the switch remains defectively opened
78 Poor solder joint of F-3 at the connection between #312 and #1001.
79. Breakage or poor solder joint of #1068.
80. Separation of 6-53 at the solder joint between #1006 and #1001.
81. Breakage of printed circuit of #1001.
82. Short-circuit between 6-47 and 6-48 on #1006, or between 5-13 and 5-14 on #1005

180R resistor

flat board ceramic board Rw side print

83. Poor solder joint of #1037 on #1006 (6-5 and 6-6)

84. Memory SW remains closed.

85. Short-circuit between 6-70 and 6-69 at the solder joint on #1006.

86. Poor solder joint of F-99 on #1001.

87. Separation of 6-70 on #1006.

88. Solder joint of #687 is excessively large, and comes in contact with the top cover.

89. Breakage of #1078 (It short-circuits with the top cover)

90. Solder joint of #1078 on #706 short-circuits with the top cover.

! 91. Defective solder joint of #1078 short-circuits with #661.

92. #706 or #687 short-circuits with the camera body

93. Incorrect wiring between #1090 and #1004.

#1089 ⟶ F-92

#1087 ⟶ F-101

#1088 ⟶ F-117

#1062 ⟶ F-106

94. F-89 short-circuits with F-90 at the solder joints between #1001 and #1004.

! 95. Defective #1009 (F-10)

96. F-12 short-circuits with F-13 on #1009.

97. F-139 short-circuits with F-142.

98. Caulked section of #701 and #702 on #688 short-circuits with the solder joint of #687 with #1027.

99. F-134 short-circuits with F-135 at the solder joint of #1030 to #1006.

100. F-134 short-circuits with F-135 on #1030.

101. Brush of #1030 defectively contacts with the front body.

102. Separation of 6-76 at the solder joint of #1001 with #1006.

103. Legs positive and negative of #1059 short-circuit each other at the solder joint of #383.

104. Black lead-wires of #317 short-circuit each other at the solder joint of #383.

!! 105. Poor solder joint of F-1 on #1001.

!! 106. Poor solder joint of F-2 on #1001.

! 107. Breakage of black lead-wire of #317

108. Although the film-advance is completed, the insufficient amount of charging #292 will not bring #316 in contact with #317.

109. Poor contact of #316 or #317.

110. Poor solder joint of F-96 on #1004.
111. Poor solder joint of #1060 (F-76 and F-77)
112. Poor solder joint of #1071 (F-79 and F-83)
113. Poor solder joint of F-138 on #1030.
114. Defective #1030.
115. Defective #1027.
116. 6-77 short-circuits with 6-76 at the solder joints of #1006 with #1001
117. 6-38 short-circuits with 6-39 or 6-39 short-circuits with 6-40 at the solder joints of #1006 with #1002.
! 118. Memory SW remains opened or fails to close sufficiently.
119. Breakage or poor solder joint of #1083.
120. Poor contact between #764 and #6 in the assembly unit of Memory SW.
121. Separation of 6-70 at the solder joints of #1006 to #1001.
122. Poor contact between #1099 and #1 under #1005.
123. Clearance of contact blades of Trigger SW is too narrow to open.
124. #1068 short-circuits with the ground, because the body catches #1068 and damages its vinyl cover.
!! 125. When installing #201 onto the camera body, #201A fails to be speed control used. Thus, the mechanical operation shocks #224 to float.
126. Deform of #224.
127. Contact pressure of #224 onto #1008 is insufficient. speed control
128. Contact pressure of the brush for Delay-time adjustment section on #1030.
129. Breakage of #1067. It short-circuits with the body.
130. Deform of #421. It short-circuits with the body.
131. 6-44 short-circuits with 6-43 or 6-55 at the solder joint of #1006 with #1002.
132. 5-10 short-circuits with 5-9 or 5-11 at the solder joint of #1005 with #1002.
133. Breakage of Gray-cord V on #1032, which connects to #1032.
134. Poor solder joint of #1032 with #222.
135. Separation of #224 on #1008 (Section V)
136. Separation of 6-62 at the solder joint of #1006 with #1001.
137. Breakage of Gray cord W, which connects to F-30 on #1032.
138. Poor solder joint between #222 and #1032. (Section W)
139. Separation of #224 on #1008. (Section W)

140. Separation of 6-61 at the solder joint of #1006 with #1001.
141. Breakage of Gray cord X, which connects to F-29 on #1032.
142. Poor solder joint between #222 and #1032 (Section X)
143. Separation of #224 on #1008 (Section X)
144. Separation of 6-60 at the solder joint of #1006 with #1001.
145. Breakage of Gray cord Y, which connects to F-28 on #1032.
146. Poor solder joint between #222 and #1032 (Section Y)
147. Separation of #224 on #1008 (Section Y)
148. Separation of 6-58 at the solder joint of #1006 with #1001.
149. Breakage of Gray cord Z, which connects to F-27 on #1032.
150. Poor solder joint between #222 and #1032 (Section Z)
151. Separation of #224 on #1008 (Section Z)
152. Separation of 6-57 at the solder joint of #1006 with #1001.
153. Short-circuit between Gray cords V and W at the solder joint of #222 with #1032.
154. Short-circuit between 6-62 and 6-61 at the solder joint of #1006 with #1001.
155. Short-circuit between Gray cords W and X at the solder joint of #222 with #1032.
156. Short-circuit between 6-61 and 6-60 at the solder joint of #1006 with #1001.
157. Short-circuit between Gray cords X and Y at the solder joint of #222 with #1032.
158. Short-circuit between Gray cords Y and Z at the solder joint of #222 with #1032.
159. Short-circuit between 6-58 and 6-57 at the solder joint of #1006 with #1001.
160. Short-circuit between 6-45 and 6-46 at the solder joint of #1006 with #1002.
161. Short-circuit between 5-11 and 5-12 at the solder joint of #1005 with #1002.
162. Short-circuit between 6-43 and 6-42 at the solder joint of #1006 with #1002.
163. Short-circuit between 5-9 and 5-8 at the solder joint of #1005 with #1002.
164. Short-circuit between 6-36 and 6-37 at the solder joint of #1006 with #1002.
165. Short-circuit between 5-2 and 5-3 at the solder joint of #1005 with #1002.

166. Short-circuit between 6-37 and 6-38 at the solder joint of #1006 with #1002.
167. Short-circuit between 5-3 and 5-4 at the solder joint of #1005 with #1002.
168. Short-circuit between 6-23 and 6-24 at the solder joint of #1006 with #1030.
169. Defective #1005
170. Separation of 6-36 or 6-37 at the solder joint of #1006 with #1002.
171. Separation of 5-2 or 5-3 at the solder joint of #1005 with #1002.
172. Poor solder joint of #1042 on #1005 (5-72 and 5-73)
173. Poor solder joint between 1/2000-section of #221 and #1032 or breakage of circuit pattern on #1032.
174. Breakage of 1/2000-section, which connects to F-22 on #1032.
175. Separation of #217 on #1007
176. Poor solder joint between COM-section of #221 and #1032 or breakage of circuit pattern on #1032.
177. Breakage of COM-section, which connects to F-24 on #1032.
178. Defective #1007
179. Short-circuit between #201 and 1/2000-section of #221 or its solder joint.
180. 8 sec.-section of #221 defectively contacts with #852.
181. Short-circuit between 6-29 and 6-28 at the solder joint of #1006 with #1030.
182. Short-circuit between 8 sec.-land and COM-land at the solder joint of #221 with #1032.
183. Separation of 6-27 at the solder joint of #1006 with #1001.
184. Separation of 6-34 at the solder joint of #1006 with #1001.
185. Separation of 5-19 at the solder joint of #1005 with #1002.
186 Separation of 6-56 at the solder joint of #1006 with #1001.
187. Separation of 6-41 at the solder joint of #1006 with #1002.
188. Separation of 5-7 at the solder joint of #1005 with #1002.
!! 189. Separation of 6-82 at the solder joint of #1006 with #1001.
190. Poor solder joint of 6-29 at the solder joint between #1006 and #1030.
191. Short-circuit between 6-24 and 6-25 due to breakage of cover of #1096 at the solder joint of #1006 with #1030.
192. Poor solder joint of F-95 at the solder joint between #1004 and #1001.

193. Short-circuit between F-95 and F-96 at the solder joint of #1001 with #1004.

194. Poor solder joint between 8 sec.-section of #221 and #1032 or breakage of circuit pattern of #1032.

195. Breakage of 8 sec.-section, which connects to F-25 on #1032.

196. Separation of 6-47 at the solder joint of #1006 with #1002.

197. Separation of 5-13 at the solder joint of #1005 with #1002.

198. Poor solder joint of #1043 on #1005 (5-68 and 5-69)

199. Breakage of #1080, which causes the short-circuit with the body die-casting. orange wire to ceramic board (1005) on side

200. Short-circuit between 5-35 and 5-36 at the back of #1005.

201. Short-circuit between 5-70 and 5-71 at the back of #1005.

! 202. Separation of 5-61 at the solder joint of #1005 with #1003.

! 203. Poor contact between #1028 and #1024.

204. Defective #1003

205. Defective #1024

! 206. Separation of a partial segment at the solder joint of #1005 with #1003. For example, separation of 5-54.

207. Short-circuit between 6-48 and 6-47 at the solder joint of #1006 with #1002.

208. Short-circuit between 5-4 and 5-13 at the solder joint of #1005 with #1002.

209. Separation of 6-49 at the solder joint of #1006 with #1002.

! 210. Separation of 5-15 at the solder joint of #1005 with #1002.

211. Short-circuit between 6-48 and 6-49 at the solder joint of #1006 with #1002.

212. Short-circuit between 5-14 and 5-15 at the solder j0int of #1005 with #1002.

213. Poor solder joint of Vcc-land on #1003 with #1089

214. Poor solder joint of #1006A (6-7)

215. Poor solder joint of #221 with #1032

216. Breakage of Self-timer SW section on #1032.

217. Poor contact between #216 and #1008

218. Separation of 6-67 at the solder joint of #1006 with #1001.

219. Short-circuit between Self-timer SW section and Gray cord Z at the solder joint of #221 with #1032.

220. Short-circuit between 6-67 and 6-68 at the solder joint of #1006 to #1001.

3-31 Unit, mirror-box (rewind-side)

Front plate unit

↓

Unit base FA2-55
Retainer FA1-691

Put the protrusion of (#691) into the hole of FA1-55.

↓

Screw ⊕ #882 x 2
Screw ⊕ #880

When tightening screws, place FA1-55 in the direction of arrow. (See fig. 1-1.)

↓

Unit base, aperture coupling thread FA1-690

Take up Aperture coupling thread (#732) around Pulley A (#689) and Pulley B (#694).

The engagement of gears of Winding roller #692 is shown on P. S5.

↓

Screw ⊕ #858
Screw ⊕ #862

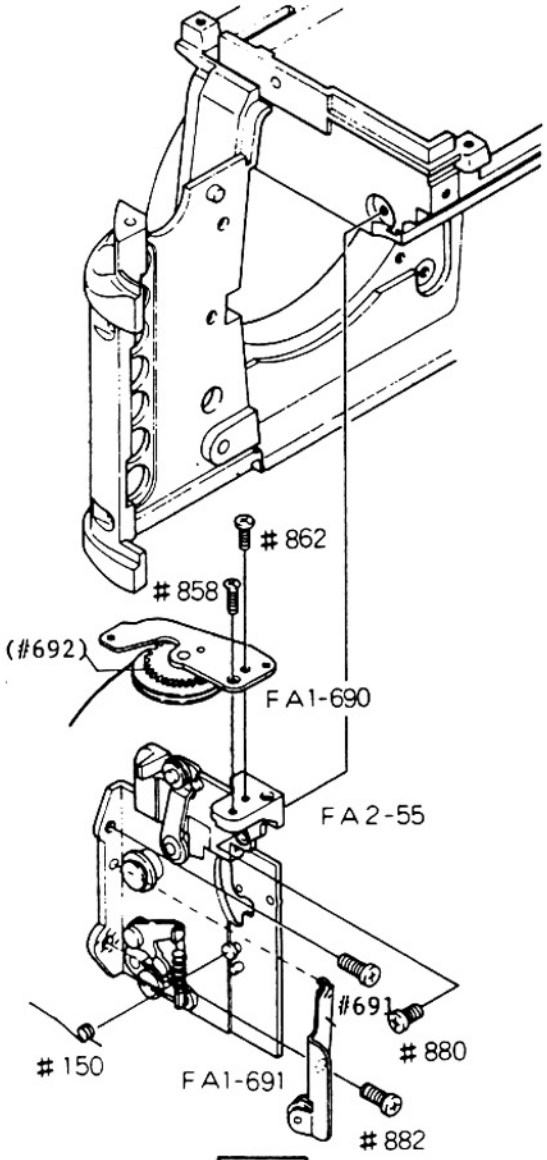

fig. 1-1

Front plate, rewind-side

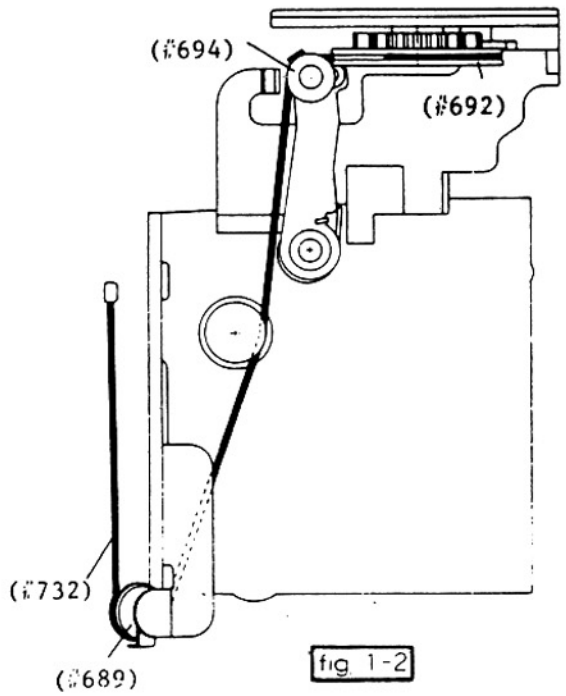

fig. 1-2

3-32 Mirror Holder and Unit, mirror-box actuating

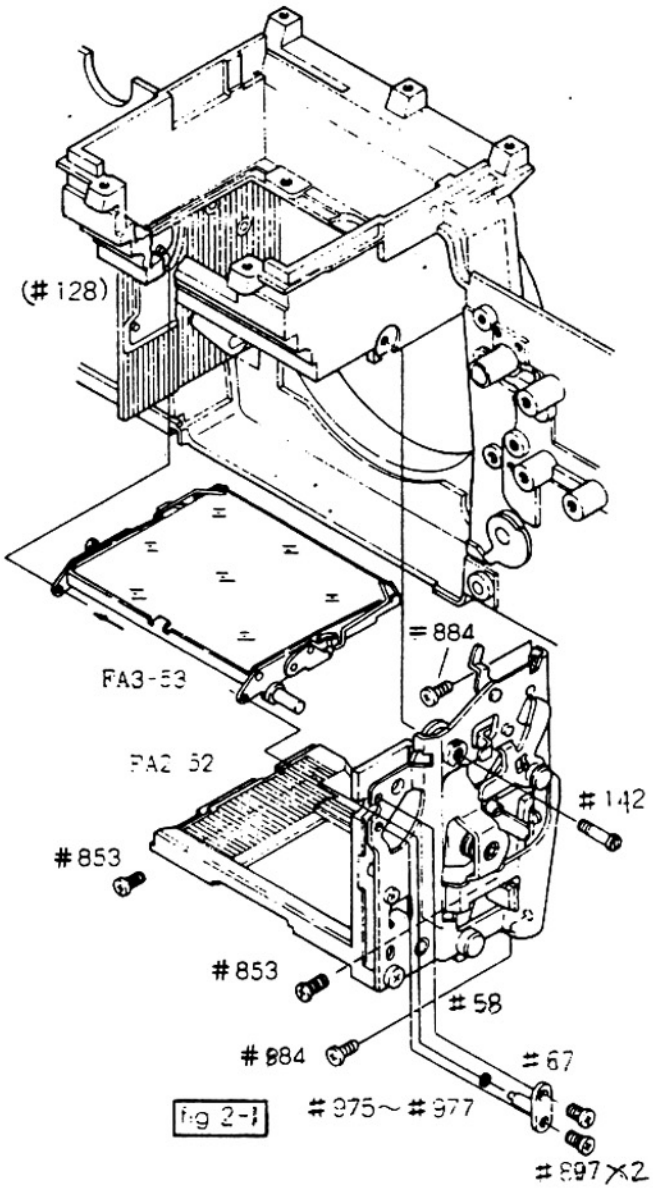

fig 2-1

fig 2-2

Front plate unit

↓

Mirror holder FA3-53

Attach FA3-53 to FA3-52, and link the fork of Stay (#74) to Pin (#128).

↓

Unit FA2-52

When installing FA2-52, use care to the followings:

1) Position Pin #117 above Main lever #59. (fig. 2-4)

2) Engage Pin #167 with Actuating lever #63. (fig. 2-4)

3) Bring Mirror-up lever #62 against Acceptor #61.

↓

Screw ⊕ #884 x 2
Screw ⊕ #881 x 2
Screw ⊖ #142

Screw #142 positions **FA3-52** for the proper installation.

↓

Washer #975, #976, #977 (respective thickness: 0.1, 0.2, 0.3mm)

↓

Mirror bearing shaft #67

Put the shaft of #67 into the hole of Mirror holding arm (#70).

↓

Screw ⊕ #897 x 2

1) Check the mirror for horizontal play: 0.05 - 0.15mm
For adjustments, replace Washers #975 - 977.

2) Hold the mirror upward with the finger, then see if the mirror returns to the viewing position when releasing the finger.

↓

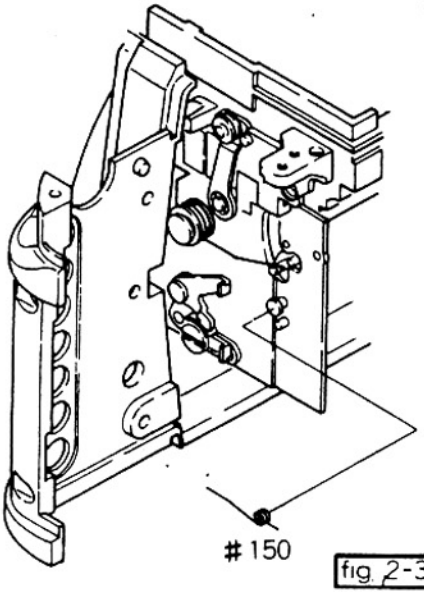

fig. 2-3

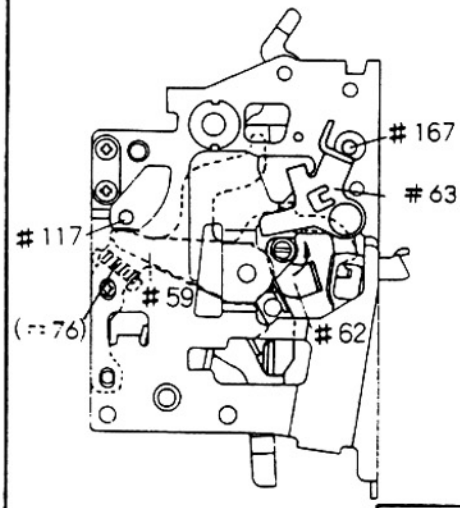

fig. 2-4

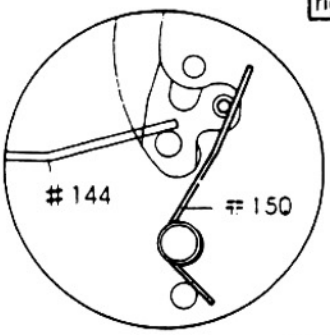

fig. 2-5

Spring #150

Fig. 2-5 shows how to hook Springs #150 and #144.

Check again the mirror for its smooth movement.

3-33 Front Plate Unit

Front plate unit
↓
Lever #738
↓
Axle #737
Axle #739
↓
Spring #746
Snap ring #922

Fig. 3-1 shows how to hook Spring #746.

After installing, check #738 for smooth movement.

Coupling lever #169
Axle #168

Use Tool J1162 .

Coil #199, Screw ⊕ #884 x 3

When installing #199, use care to the following:

Provide 0.5mm clearance between Lever #65 and Shaft #99.

Hold Vertical lever FA1-58 in the changed position.

When installing #199, the depth of engagement between #65 and Mirror release claw should be 0.7 - 0.8mm. (See fig. 3-3.)

Unit base FA2-751

When installing FA1-751, put Contact blade A and Safety contact A FA1-755 underneath Insulator (#164).

Pass Lead wires #1076 and #1977 through the hole of Unit base (#751).

Screw ⊕ #870 x 2

Lead wire #1076
Lead wire #1077

Solder #1076 and #1077 in place

Guide #775
Screw ⊕ #872

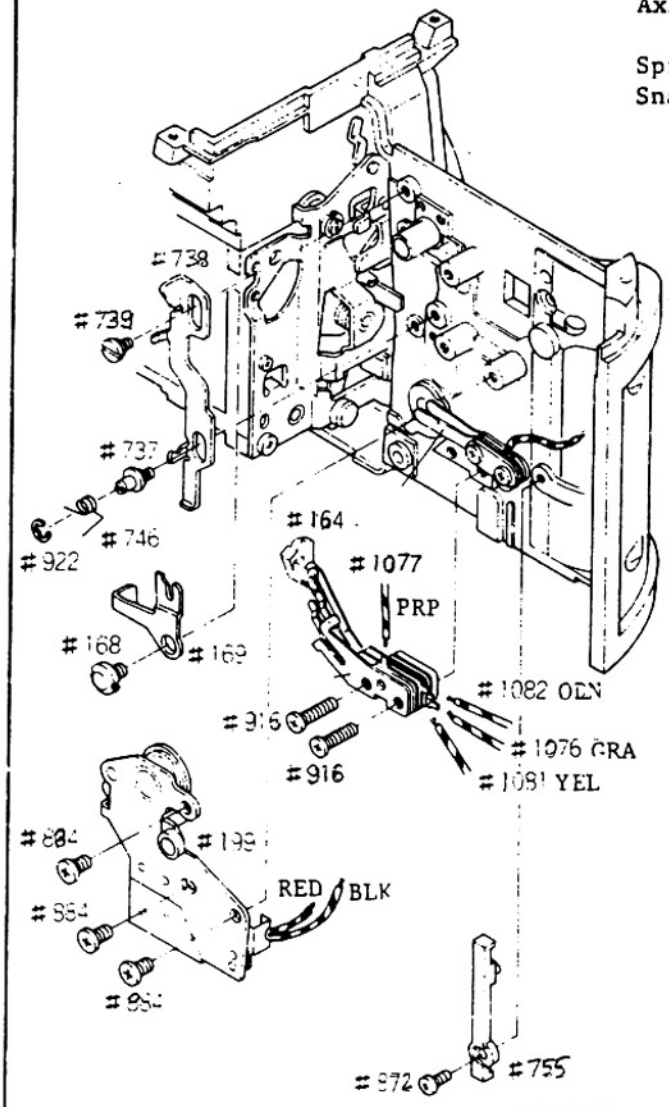

fig 3-1

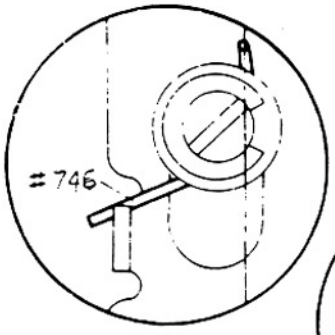

fig 3-2

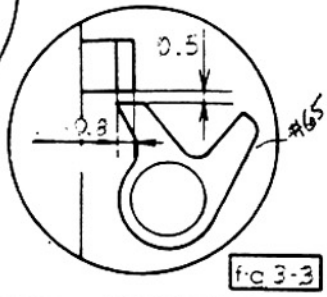

fig 3-3

3-34 Adjustments of Mirror 45° Angle, Infinity Focus and Parallax

When either FA3-52 or FA1-55 is removed in repairs, the Mirror-45 and the parallax should be always adjusted.

The Repair Manual Nikon FE p.31 shows the adjusting procedures in move detail.

3-34-1 Mirror 45° Angle

Standard: ① Misaligning image in the vertical direction: +10' - -15'

② Misaligning image in the horizontal direction: ±20'

③ The width of out-of-focus image: less than 5'

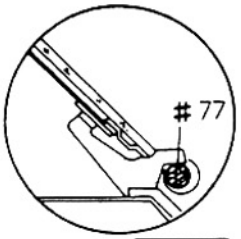

fig. 4-1

Adjustment:

① can be adjusted by rotating Pin (#77). (fig. 4-1)

② can be adjusted by re-locating #67. (fig. 4-2)

③ can be adjusted by replacing GII or Mirror holder FA3-53.

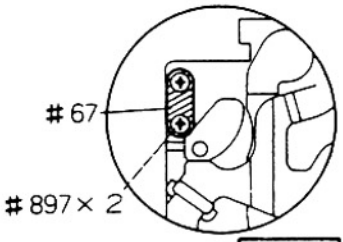

fig 4-2

NOTE: THE INFINITY FOCUS AND THE PARALLAX SHOULD BE ADJUSTED AFTER COMPLETION OF CAMERA BODY REASSEBLING.

3-34-2 Infinity Focus

Standard: Misaligning image -15" - +30"

Adjustment can be made by replacing Washers #978 - #983 or Viewfield frames #113 - #115. (See fig. 4-3.)

3-34-3 Parallax Error

Standard to be ± in the vertical and horizontal direction.

Adjustment is possibe by loosening Screw ⊕ #897 x 4 and by re-locating viewfield frame. (See fig. 4-3.)

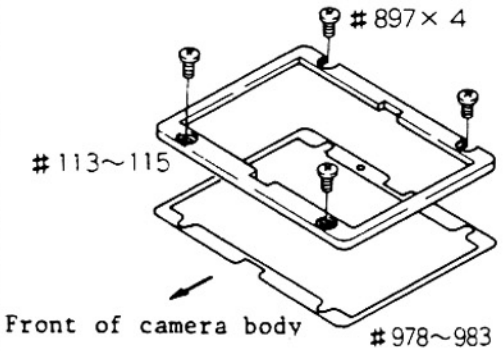

fig 4-3

3-35 Front Plate Unit Check/Adjustment

3-35-1 Main lever FA1-59

When FA1-59 is set to the charged-condition and Lever #65 (p.34) is released by Coil #199, FA1-59 and Mirror holder #53 should move smoothly.

When FA1-59 is returned to the rest position slowly, FA1-59 should be coupled to #65.

When a lens is mounted or the mirror is locked up, FA1-59 works properly as above.

3-35-2 Contact blades #757 and #758, and Safety contacts #755 and #756 (Shutter release switch)

Check both of them for the clearance between the switching blades, after holding FA1-59 to the changed condition.

Standard clearance between	#757 and #758:	0.5mm
	#755 and #756:	0.4mm
	#764 and #765:	0.5mm

Adjustments can be made by bending Retainer #759 or Contact blade B (#765).

3-35-3 Contact blades #764 and #765 (Memory Lock Switch)

Check that Memory lock button #744 surely closes the memory lock switch when depressed and that it opens the switch when restored.

3-35-4 Height of Aperture Lever

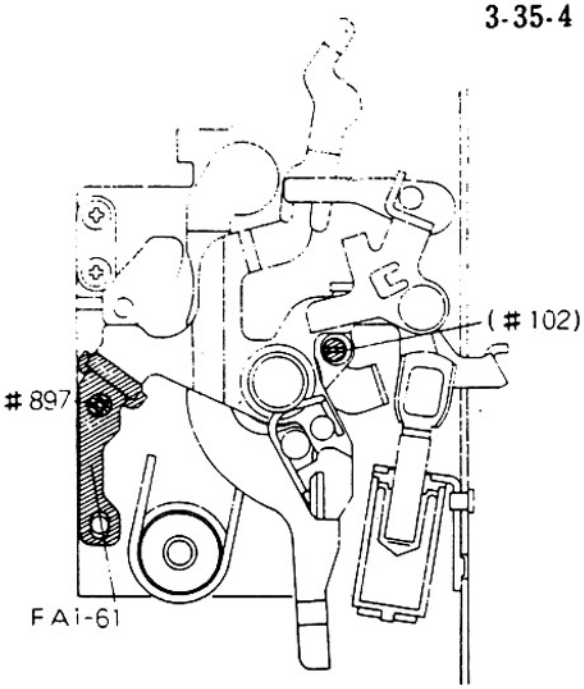

fig 5-1

Check the height of aperture lever when Main lever FA1-59 is set to the charged-position.

Standard

① Charged-position: $3.1 \pm {}^{0.1}_{0}$ mm

② Released-position: Less than 3.65mm

③ Balance between ① and ②: More than 0.2mm

Adjustment

① Rotate Pin (#102)

② Loosen Screw ⊕ #897 and re-locate Acceptor FA1-61 (See fig. 5-1).

3-36 Display Block, exposure information

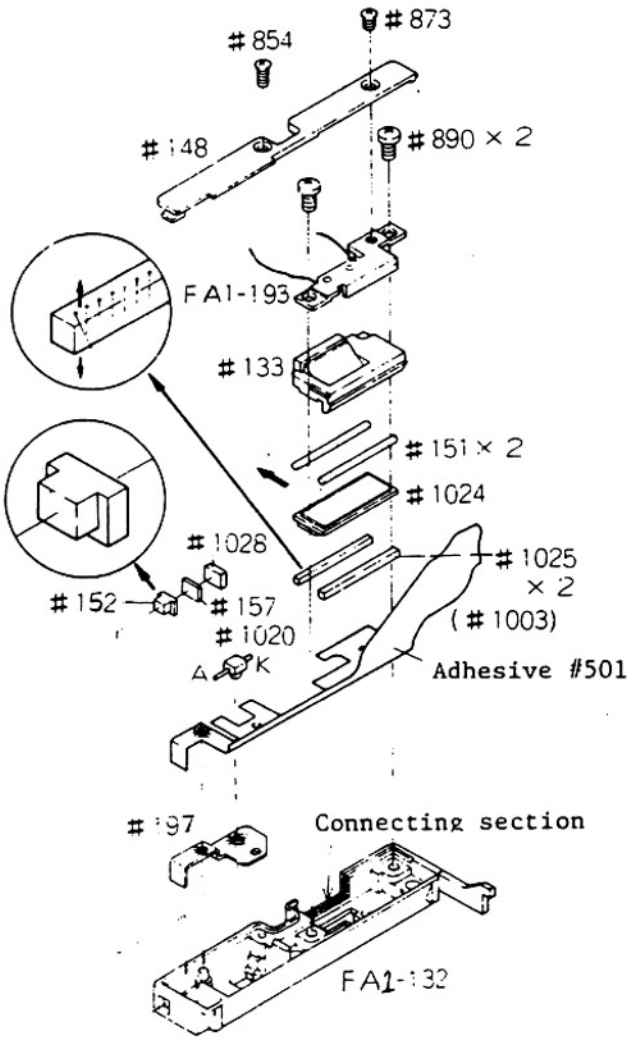

FIG 6-1

Display block FA1-132

↓

Base plate #197

Install #197 aligning its hole with the boss of FA1-132.

↓

FPC #1003

Apply Pliobond on the back of #1003 and cement #1003 in place, aligning its hole with the boss of FA1-132.

See if the connecting section of #1003 is flat and it connects with #1024 efficiently.

↓

Erastic connector #1025
LCD #1024

When cementing, bring the connecting face of #1025 against #1024 (See fig. 6-2).

Place #1024 as for as it will go in the direction of arrow.

Note that #1025 should be carefully cemented in place for preventing malfunctional display.

↓

Rubber #151 x 2
Window #133

Use Pliobond to cement #151 in the groove of #133.

↓

Retainer FA1-193
Screw ⊕ #890 x 2

Do not over-tighten #890.

↓

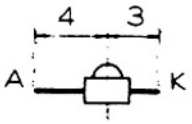

LED #1020

fig 6-3

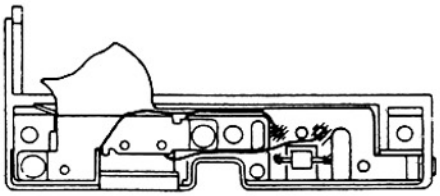

fig 6-4

Illuminator button #152

Fig. 6-1 shows how to install #152.

Contact plate #157
Piezoelectric semiconductor #1028

Insert #157 into #152, and insert #1028 into #1003.

LED #1020

Fig. 6-3 shows the polarity of #1020.

Soldering

Solder #1020 and the lead wires.

Put the lead wires into the groove of FA1-132. (fig. 6-4)

Cover #148
Screw ⊕ #854
Screw ⊕ #874

Do not overtighten #854 and #874.

Check #1024, #1020 and #152 for proper operation.

When the display is malfunctional, check the defective segment and re-locate or replace #1025, #1024 and #1003.

3-37 Shustter-speed Selector

fig 7-1

Unit base #201
↓
Disk #211
Retaining ring #207
↓
Spring FA1-206
Tube #205

See if FA1-206 moves smoothly along the groove of #201.

Steel ball #932
↓
Spring #220
↓
Steel ball #932
↓
Click stop disk #203

Drop Lock pin #218 into the groove A.X of #203.

Brush contact A #216

Insert the protrusion of #216 into the hole of #211.

Gray cord board FA1-1008
↓
Supporter FA1-223

Fig. 7-2 shows how to install FA1-223.

Manual resistor FA1-1007
↓
Brush retainer FA1-215

Fig. 7-3 shows how to install FA1-215 inplace.

Screw ⊕ #859

fig 7-2

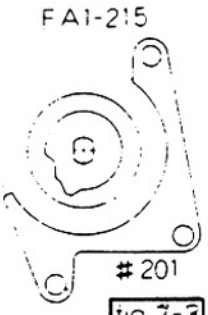

fig 7-3

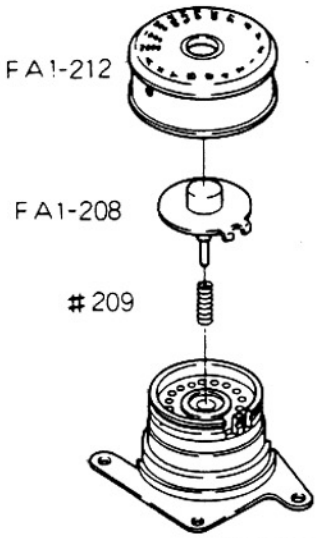

fig. 7-4

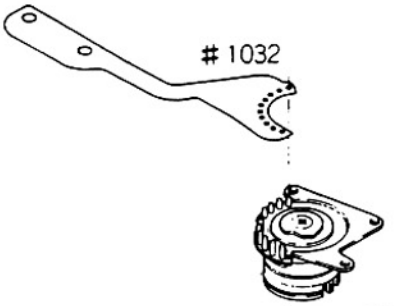

fig 7-5

Spring #209
Disk, auto-lock release FA1-208
↓
Shutter-speed selector FA1-212

Check FA1-212 for its click-stop and locking at A or X settings.

↓
FPC 4 #1032

- After aligning the through-holes of pins A·B with the holes of FPC 4, solder them as shown in fig. 7-5.

  Do not damage the FPC by heat.

3-38 Shutter-speed Selector Circuit Check

3-38-1 Gray Code (Cyclic Binary Code) Check

Use a digital multi-meter to check gray code signal at each shutter speed setting. Connect the test prod positive to the terminals V.W.X.Y.Z, and the test prod negative to the ground.

See P. E16 about the gray code.

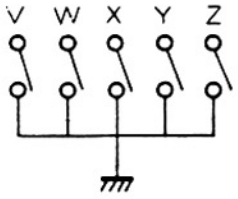

	V	W	X	Y	Z
2000	0	1	0	0	0
1000	0	1	0	0	1
500	0	1	0	1	1
250	0	1	0	1	0
125	0	1	1	1	0
60	0	1	1	1	1
30	0	1	1	0	1
15	0	1	1	0	0
8	0	0	1	0	0
4	0	0	1	0	1
2	0	0	1	1	1
1s	0	0	1	1	0
2s	0	0	0	1	0
4s	0	0	0	1	1
8s	0	0	0	0	1
B, T	0	0	0	0	0
X	1	0	0	0	0
AUTO	1	1	0	0	0

1 : Current flow.
0 : Current fails to flow.

3-38-2 Manual Setting and Auto-manual Changeover

Connect the test prod positive to the terminals of 1/2000, Auto, 8 sec, and the test negative to the COM.

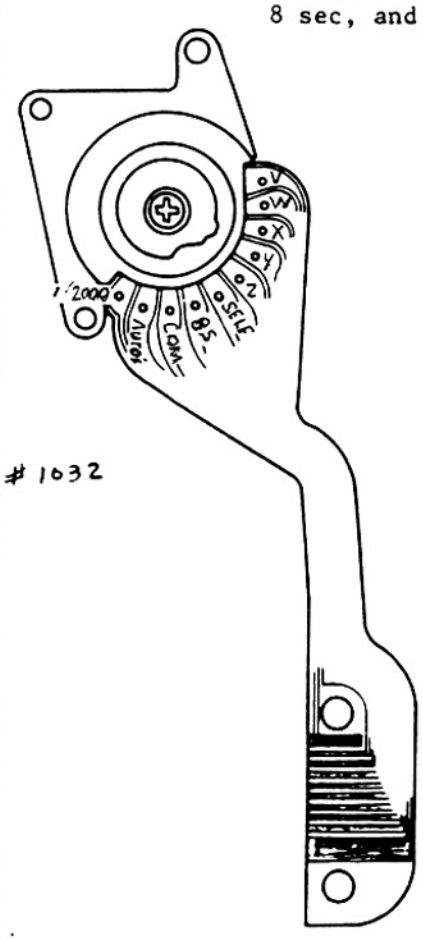

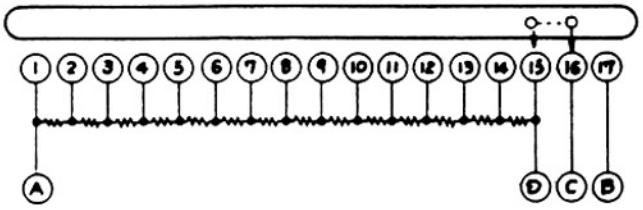

mode / Terminal	Auto	Manual	B.T.X
1/2000 - COM A - C	OFF	18k /EV 1.8 - 27k	OFF
Auto-COM B - C	ON	OFF	OFF
8 sec. COM D-C	OFF	variable	OFF

3-39 Shutter Curtains Replacement

3-39-1 Disassembly Procedures

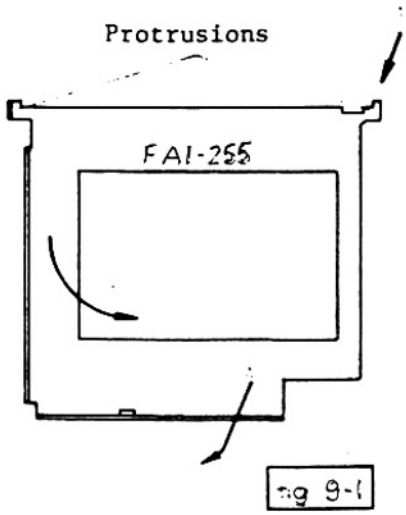

Camera body
↓
Front plate unit
↓
FPC
↓
Battery chamber FA2-20
Screw + #882 x2
↓
Light-shield FA1-255
Screw + #855 x2

Lift off FA1-255 from Unit base #281 in the order 1-2-3. When re-installing, reverse this order.

↓
Shutter curtains

3-39-2 Replacement Procedures

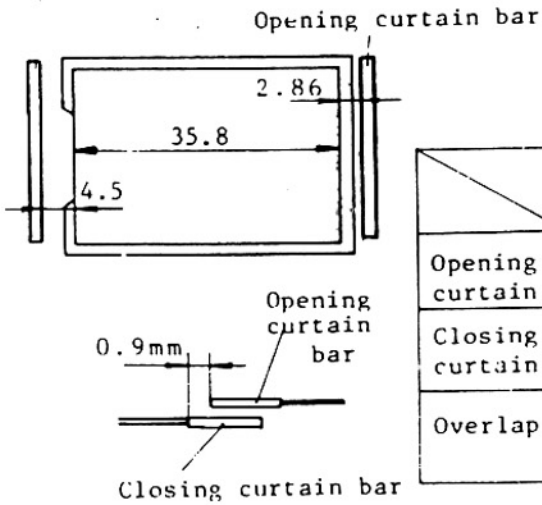

The Repair Manual Nikon F2 (Body) Supplement illustrates the procedure in detail.

	Reference points	Standard
Opening curtain	From the edge of aperture to the opeing curtain bar	2.86mm
Closing curtain	From the edge of aperture to the closing curtain bar	4.5mm
Overlap	See fig. 9-3.	0.9mm

3-39-3 Note the Following When Replacing the Curtains

1) Use care not to damage the FPC
2) Setting the camera body in the shutter-released condition, rotate Winding roller FA1-440 counterclockwise and check that Brush lever #502 firmly comes in contact with Pin #501.
3) When adjusting the tension of the curtain, rotate Tension gears clockwise as below

   Opening curtain - Tension gear #467 - Turn 2·1/2 - 3·1/2 turns
   Closing curtain - Tension gear #462 - Turn 1/2 - 3/4 turns

4) Adjust the time of shutter curtains travel at 1/2000 sec. setting.

   Standard to be 10.0±0.5 ms

Inspection Standard for Repair

	Item	Condition/Standard				Remarks
Shutter Speed	Exposure time	Setting or theoretical shutter speed	standard	Tolerance limits (ms) Auto	Tolerance limits (ms) Manual	Shutter tester (J19022-1) When measuring, note the following: 1) Be sure to close the eye-piece shutter. 2) At low-light level side, prevent the surrounding light from affecting the measured value.
		2000	0.488		0.357 - 0.667	
		1000	0.977	0.62 - 1.54	0.715 - 1.33	
		500	1.95	1.38 - 2.76	1.43 - 2.66	
		250	3.91	2.76 - 5.53	3.91 - 5.34	
		125	7.81	5.53 - 11.0	5.72 - 10.7	
		60	15.6	11.0 - 22.1	12.7 - 19.2	
		30	31.2	22.1 - 44.3	25.3 - 38.4	
		15	62.5	44.2 - 88.4	50.8 - 76.9	
		8	125	88.4 - 177	102 - 153	
		4	250	174 - 354	203 - 308	
		2	500	354 - 707	406 - 616	
		1	1000	707 - 1414	812 - 1231	
		2	2000	1414 - 2828	1620 - 2460	
		4	4000	2549 - 6277	3250 - 4920	
		8	8000	5098 - 12553	6500 - 9850	
		X	14.2		13.5 - 17.5	
Automatic Shutter Speed	Memory lock	Setting LV9, ASA100 and F5.6, measure the automatic shutter speed and designate it as "To". Next, depressing the memory lock button, change the LV only, then measure the shutter speed after 30 sec. and designate it as "Tm". In this case, the following formula should be established: $\left\lvert \log_2 \frac{Tm}{To} \right\rvert \leqq 0.2$				Shutter tester (J19022 - 1)
	Auto limiter	Automatic shutter speed to be 0.25 - 0.49ms under the following conditions (regardless of F/No. changes). ① LV14, ASA400, F4 ② LV14, ASA400, F2.8 ③ LV14, ASA400, F2				Shutter tester (J19022 - 1)

	Item	Condition/Standard	Remarks
	Auto flash Synchronization	Synch speed at "Auto" setting when strobe power is ON: 13.7 - 18.1ms (Liquid crystal display "80")	Shutter tester (J19022 - 1) Dummy strobe (J18077)
Manual Shutter Speed	Uneveness of exposure	Exposure balance between the middle of the frame and the both frame edges: 1/2000 sec. = ± 0.3 EV 1/1000 sec. = ± 0.2 EV	Shutter tester
	Bounce	Shutter curtain bounce should not be detected at every shutter speed setting.	Bounce inspection tool
	Time of shutter curtain travel across the aperture	10.0 ± 0.5ms	Shutter tester
	Manual flash Synchronization	Synch speed at Manual settings when strobe power is ON. Shutter speeds of X or faster: 1/80 Shutter speeds slower than X: Set shutter speed	Dummy strobe (J18077) Shutter tester
	Mechanical shutter-release	Set the shutter-speed dial to any one of 1/2000 to 1/125, then release the shutter via mechanical shutter-release knob. Shutter speed: 1/55 sec.: 13.7 - 26.9ms	Shutter tester

	Item	Condition/Standard	Remarks
Exposure Measurement/Information	Automatic shutter speed display accuracy	Middle value of dead zone to be within ± 1/2EV as compared with standard display value	Shutter tester (J19022 - 1 J18041 - 1) Tool lens
	Range of dead zone for automatic shutter speed display	ASA value or F/No. value which indicates ± 1 step as compared with standard display value should be within 1 ± 1/3EV. [e.g.] 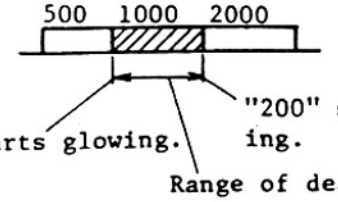 	
	Automatic over-exposure display	Setting: ASA100, LV14 When F/No. is changed from 2.8 to 2, display should change form "2000" to "$^{+}$2000".	
	Manual shutter speed display change-over accuracy	1/2000 - 1/2 : 2000 - 2 1 - 8 : 1^{-} - 8^{-} X : 80 B.T : —	
	Manual correct exposure display accuracy	Middle value of dead zone to be ± 1/5EV as compared with standard display value. Correct exposure : $^{-}M^{+}$ Overexposure : M^{+} Underexposure : ^{-}M	
	Range of dead zone for manual correct exposure display accuracy	ASA value or F/No. value for correct exposure display to be within 0.5 ± 0.2EV as compared with standard display value 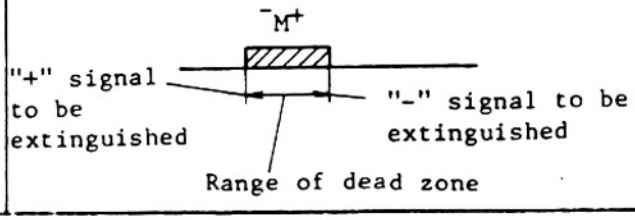 	

	Item	Condition/Standard					Remarks
	Ready-light display	Mode \ Display			Ready-light	Shutter speed	Visual inspection
		Auto		Stroke power is ON.	ON	"80"	
		Manual	X and faster			"80"	
			Slower than X			Set shutter speed	
Synch Contact	Insulating resistance	More than 30MΩ					Contact & insulation tester (J19028-1)
	Contact efficiency	More than 70% (Standard time: 1ms)					
	X time-lag	0.41 - 1.2ms (Full-open time: more than 1.5ms)					Flash synch tester (J19008-2)
Viewfinder	Infinity (∞) focus	-15" - +30" (The value before shutter-cocking should not vary after shutter-cocking.)					J18010 J19001
	Diopter	-1.0 ± 0.5 dpt.					Diopter bar
	Frame coverage	$100 \pm {}^{0}_{2}$ % (Horizontally and vertically)					Test chart (J18006)
	Viefinder image inclination	Within 30'					Focusing screen (J18007)
	Parallax error	Within 0.2mm (Horizontally and vertically)					Standard lens (J18010)
Electrical Characteristics	Miminum operable voltage for shutter	Shutter-release button should not be depressed under a voltage of 2.4 - 2.5V.					DC regulated power supply (J19024)
	Display extingishing voltage	LCD should disappear under a voltage of 2.4 - 2.5V.					Digital voltmeter (J9003-3)
	Electric current dissipation while illuminator operates	With release button half-depressed: Less than 17.9mA With release button fully-dipressed: Less than 39.8mA (Power source voltage: 3V)					J19024 J9003-3 DC ampere meter (J9004)
	Electric current when power switch is OFF	Less than 15 μA					

	Item	Condition/Standard	Remarks
Film-winding	Horizontal play of film-advance lever	Play of the tip of the lever to be within 1mm with the lever pulled-out	
	Return action of film-advance lever	When the lever is released from the fully stroked position, it should not be flush to the body.	
	Film-winding torque	Without loading film: Less than 2kgcm (Maximum) With film loaded: Less than 4kgcm (Maximum)	Torque driver Trix Pan film Neopan SS film
	MD coupling winding torque	Without loading film: Less than 1.0kgcm (Maximum) With film loaded: Less than 1.4kgcm (Maximum)	-ditto-
	Spool	Spool friction: 220 - 350g	
	Sprocket	Play of the tip of sprocket teeth: within 0.8mm Sprocket teeth position: 32 ± 0.4mm	Sprocket teeth positionig gauge (J18064)
Film-rewinding	Rewind button	Without loading film Height from button surface / Power Ready-to-rewind position: 2.8 ± 0.3 Full stroke: 3.8 ± 0.2	Vernier
		Power required to depress the button at the end of the roll of film: Less than 3kg	Balance spring
Shutter-speed Dial	Alignment of shutter-speed dial index	More than a half breadth of index should align with figures at every click-stop setting.	Visual inspection
	Cancellation of Time exposure	The closing curtain should start traveling before the shutter-speed dial is reset to "X" or "B" click-stop setting.	

	Item	Condition/Standard			Remarks
Shutter-release button	Shutter-release button stroke/ power		Stroke (mm)	Power for Shutter-release (g)	J15189
		Release-metering SW : ON — Display appears	0.5 ±0.2	70 ± 50	
		Release SW : ON — Shutter-release	1.2 ± 0.2	440 ± 60	
		Full stroke	1.5 ± 0.2		
		When measuring the stroke, denote the top surface of the release button under the normal condition as "0".			
	16-second hold	LCD should disapper in 16±1 seconds after the release-metering switch is OFF.			Stopwatch
Mirror 45° Angle	Clearance at mirror locking-up	Clearance between the reflex-mirror and the mirror stopper to be less than 0.3mm.			Visual inspection
	Mirror-rising position	Clearance between the top surface of the reflex-mirror and the mirror stopper to be 8.3±1mm.			- ditto -
	Mirror 45° position	Vertically: Within ±30' Horizontally: Within ±30'			J18037 J18070 Vertical collimator
	Strain of mirror-surface	Defocused index line of collimator: breadth: Within ±5'			Vertical collimator
Metering mirror	Clearance at mirror locking-up	No clearance can be observed between the metering mirror and the stopper (#139).			Visual inspection
Meter coupling	Rotation torque of aperture coupling ring	When turned toward minimum aperture: Less than 950gcm When turned back toward minimum aperture: 80 - 350gcm			Torque gauge for AI lens and body (J18058)
	Rotation angle of meter coupling lever	Starting position: 52° ± 0 / 1° Maximum rotation angle: More than 113.5°			

	Item	Condition/Standard	Remarks
Frame Counter	Starting position	① Open camera back ② Close camera back. On this condition, dot "0" at the starting position should align with the index.	Visual inspection
	Counter Switch	Shutter speed should change as follows when the frame counter indicated is changed from 0 to 1. ① Auto : 1/80 sec. ② Manual, X or faster : 1/80 sec. ③ Manual, slower than X: Set shutter speed	Shutter tester Tool camera back (J15187)
	Mechanical shutter-release operation	① 1/2000 -1/125 : Mechanical shutter speed (1/55) ② 1/60 - 8 : Set shutter speed	Shutter tester
Self-timer	Selftimer operation	Shutter-release condition via self-timer ① When power switch is ON: LED and should go on and off at a 2HZ rate for 8 sec. and go on and off at a 8HZ rate for 2 sec. before the shutter is released.	Visual Inspection
Lens Mount	Aperture lever	① Height: Before shutter-cocking; Less than 3.65. After shutter-cocking; $3.1 \pm^{0.1}_{0}$ Balance; More than 0.15 Full stroke; More than 6.1.	Aperture lever positioning gauge (J18004)
		② Depth: 5.3 - 6.3mm (from bayonet surface)	Aperture lever depth gauge (J18042)
		③ Horizontal position: $18.7 \,^{+0.35}_{-0.3}$ (from the center of the camera)	
		④ Power required to operate the lever at 3.1 position	Aperture lever weight gauge (J18003)

	Item	Condition/Standard	Remarks
Lens Mount	Metal back focus	Extension: 46.67 ± 0.02 (internal film-rail) Parallelness: Within 0.02mm Balance of height between internal and external film-rail: 0.23 ± 0.02mm	
	Lens release/lock pin	Protrusion above bayonet surface: 0.7 - 1.2mm Fit tolerance: Within 0.05mm Power required to operate the pin: 350 - 500g	Vernier Balance spring
Strobe	Automatic control signal	460 -730 mV (LV14, "Time" Exposure)	Lightbox Tool lens Dummy strobe Standard reflector
Shooting Test	Picture size	$24^{+0.8}_{-0}$mm x $36^{+0.8}_{-0}$mm	50/1.4 lens
	Frame-to-frame space	Normally manual film-advance operation or motor link-up operation (S or C setting): 1.8 ± 0.5mm; Max. - Min. ≦ 0.5 Manual film-advance operation made strongly/weakly: Max. ≦ 3.0 Min. ≦ 0.5	
	Multiple exposure	Frame overlap: Less than 0.3mm	
	Erroneous sprocket rotation	Blurred/doubled image should not be visible on the exposed film when the shutter is released with finger-pressure (0 - 400g) applied to the film-advance lever, and with the motor drive.	
	Image cut-off	When mounted 1200m/f11 lens with the focusing unit, no image cut-off should occure on the exposed film with various shooting angles.	

Supplement:

(Exposure Measurement/Information)

Automatic underexposure display	Setting: ASA100, LV4 When F/No. is changed from 11 to 16, display should change from "8⁻" to "⁻8⁻".